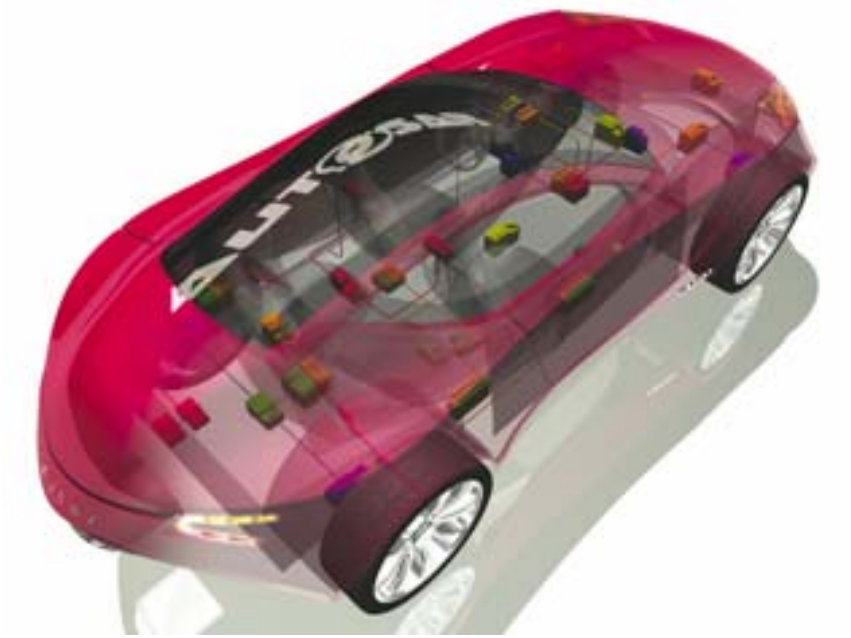

Vector AUTOSAR solution

Introduction to AUTOSAR

© 2009. Vector Informatik GmbH. All rights reserved. Any distribution or copying is subject to prior written approval by Vector.

火龙果•整理
uml.org.cn

Agenda

> **Introduction to AUTOSAR**

System Design

Application Software Components

MICROSAR Basic Software

AUTOSAR Services

Customers and Reference project

Summary

© 2009. Vector Informatik GmbH. All rights reserved. Any distribution or copying is subject to prior written approval by Vector.

火龙果•整理
uml.org.cn

What is AUTOSAR?

- Development Partnership of leading vehicle manufacturers and suppliers.

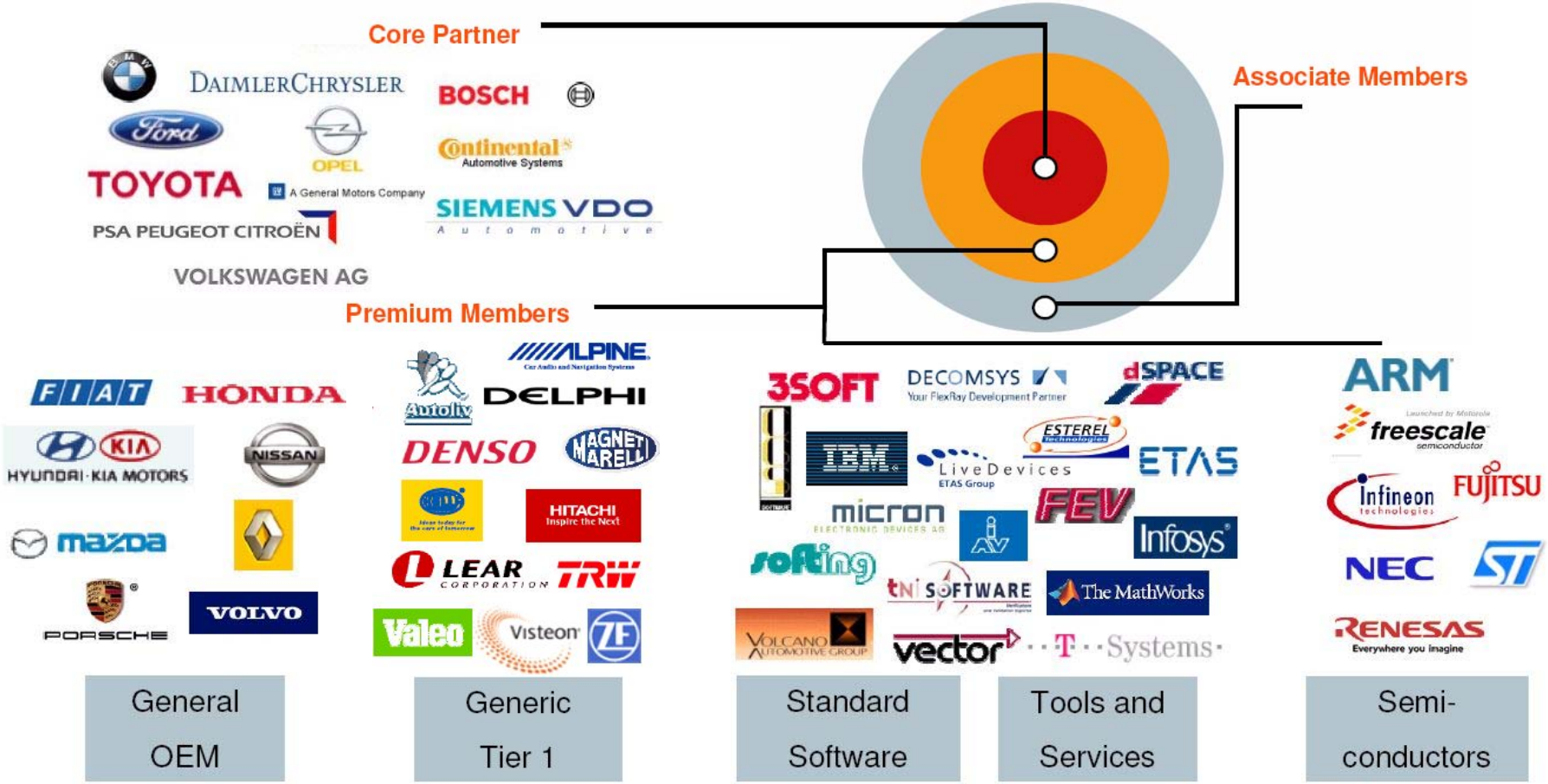

© 2009. Vector Informatik GmbH. All rights reserved. Any distribution or copying is subject to prior written approval by Vector.

火龙果•整理
uml.org.cn

The way to AUTOSAR...

History: Tools

before AUTOSAR | AUTOSAR

1999

Cooperation with Daimler for the project “TITUS”

research project to develop a tool for description of ditributed systems

2001

Release of **DaVinci** based on the experiense with the “TITUS” project

project was not completed since the industry was not ready for such a sophisticated approach but Vector continued the development

08/2003

Official formation of the AUTOSAR (**AUT**omotive **O**pen **S**ystem **AR**chitecture) partnership

© 2009. Vector Informatik GmbH. All rights reserved. Any distribution or copying is subject to prior written approval by Vector.

火龙果•整理
uml.org.cn

The way to AUTOSAR...

History: Basic Software

before AUTOSAR | AUTOSAR

Starting of the development of embedded software at Vector

Usage of **CANbedded** for serial vehicles at Daimler

Official formation of the AUTOSAR (**AUT**omotive **O**pen **S**ystem **AR**chitecture) partnership

1994 — 1996 — 08/2003

Vector was the first independent vendor of automotive communication software

- Audi
- BMW
- Volkswagen
- Porsche
- Ford
- GM

uses CANbedded for **all** ECU's

- Chrysler
- PSA
- Renault
- Fiat
- Hyundai
- Ssangyong

and other OEMs use CANbedded

© 2009. Vector Informatik GmbH. All rights reserved. Any distribution or copying is subject to prior written approval by Vector.

火龙果•整理
uml.org.cn

History: AUTOSAR I

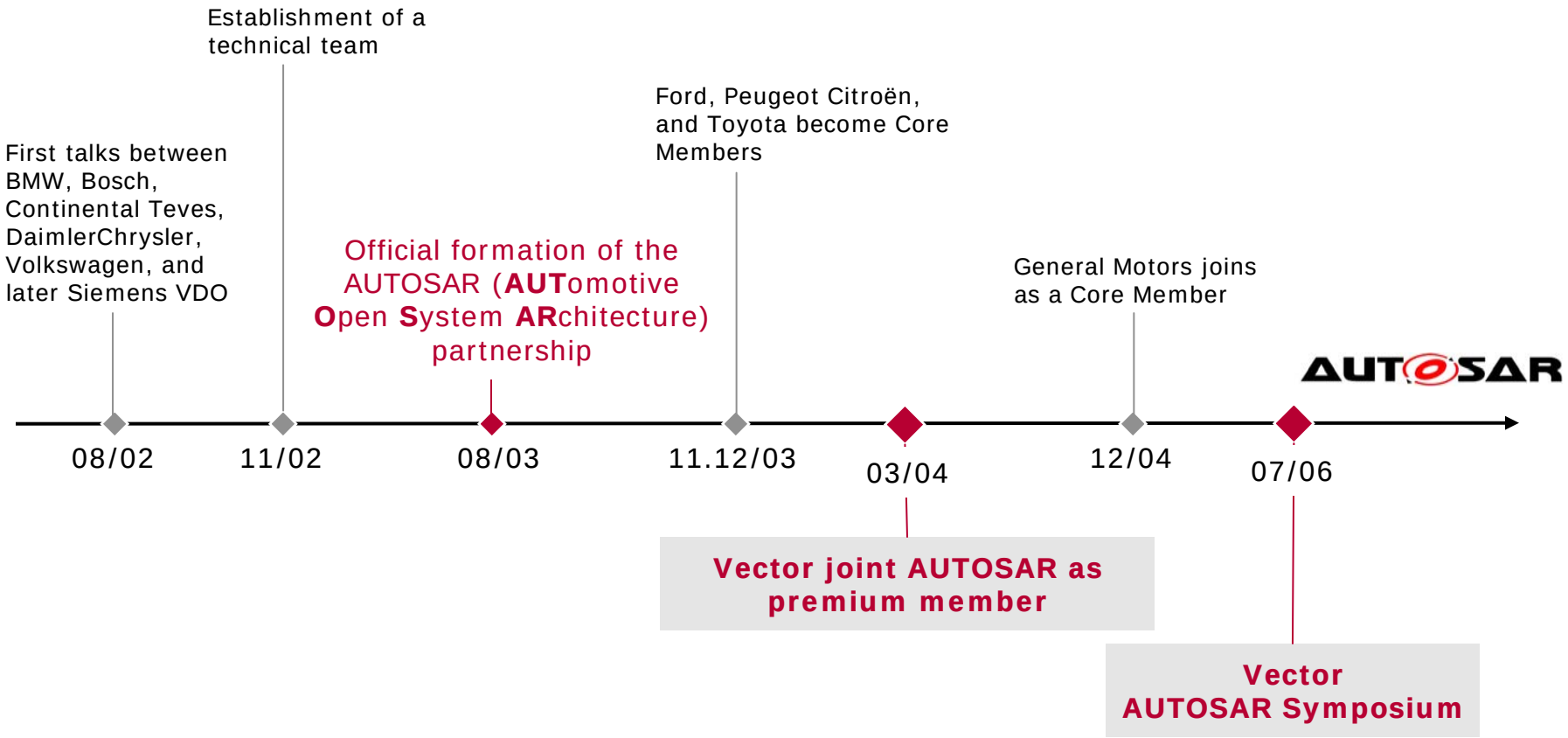

© 2009. Vector Informatik GmbH. All rights reserved. Any distribution or copying is subject to prior written approval by Vector.

火龙果•整理
uml.org.cn

History: AUTOSAR II

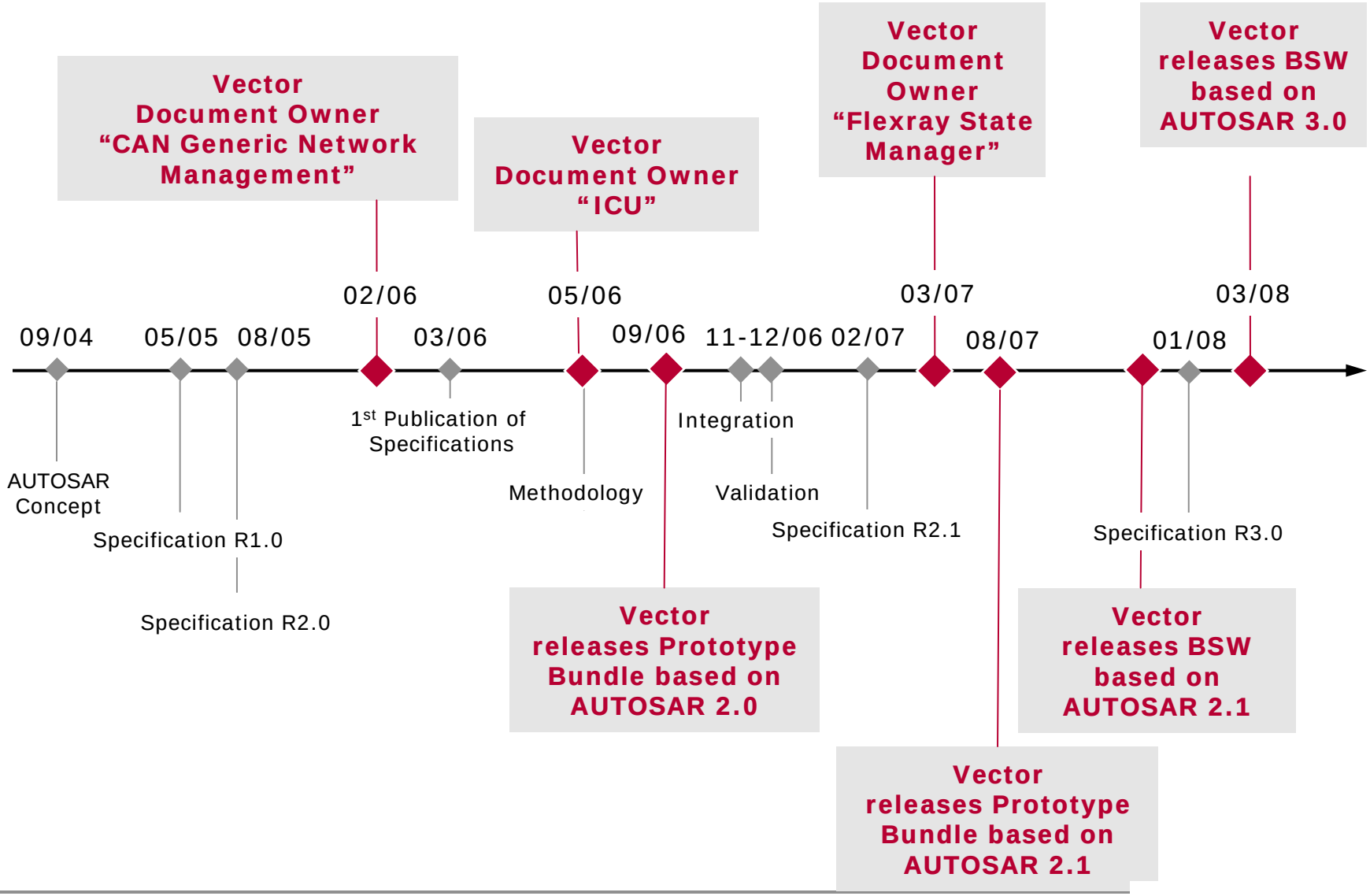

© 2009. Vector Informatik GmbH. All rights reserved. Any distribution or copying is subject to prior written approval by Vector.

火龙果•整理
uml.org.cn

History: AUTOSAR III

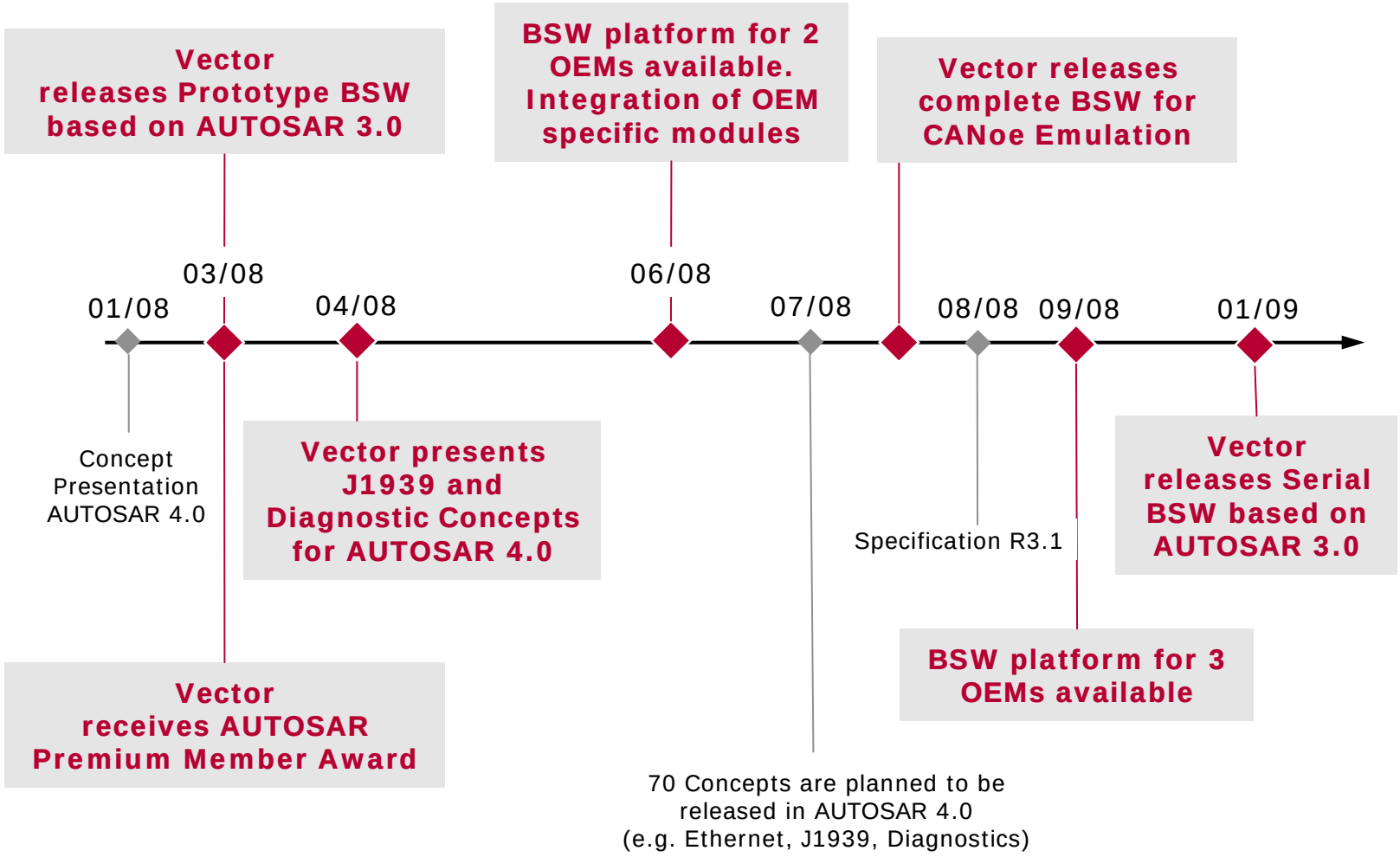

© 2009. Vector Informatik GmbH. All rights reserved. Any distribution or copying is subject to prior written approval by Vector.

火龙果•整理
uml.org.cn

AUTOSAR Work Package Participation by Vector

WP ID	Work Package Name	Vector Participant(s)	Role
WPII-1.1.1	Software Architecture and VFB	Tobias Schmid	Active
WPII-1.1.1	Software Architecture and VFB	Winfried Janz	Active
WPII-1.1.1	Software Architecture and VFB	Roland Preiß	Active
WPII-1.1.2	Vehicle and Application Mode Management	Dieter Schaufelberger	Active
WPII-1.1.5	Virtual Function Bus and RTE	Bernd Sigle	Passive
WPII-1.1.5	Virtual Function Bus and RTE	Uwe Honekamp	Passive
WPII-1.2	General Methodology and Configuration	Uwe Honekamp	Active
WPII-1.3	Functional Safety and Processes	Simon Burton / Klaus-Jürgen Amsler	Active
WPII-2.1.1	COM Stack	Frank Triem	Passive
WPII-2.1.1	COM Stack	Hannes Haas	Active
WPII-2.1.1	COM Stack	Alex Lunkenheimer	Active
WPII-2.1.1	COM Stack	Pascale Morizur	Passive
WPII-2.1.1	COM Stack	Martin Schlodder	Passive
WPII-2.1.1	COM Stack	Thorsten Albers	Passive
WPII-2.1.1	COM Stack	Dirk Großmann	Passive
WPII-2.1.2	FlexRay	Dirk Grossmann	Active
WPII-2.1.4	Diagnostics	Oliver Garnatz	Passive
WPII-3.1	Basic Software Validation	Helmut Brock	Active

© 2009. Vector Informatik GmbH. All rights reserved. Any distribution or copying is subject to prior written approval by Vector.

火龙果•整理
uml.org.cn

AUTOSAR Document Ownership by Vector

WP ID	Work Package Name	Vector Document Owner	Document
WPII-1.2	General Methodology and Configuration	Uwe Honekamp	Software Component Template
WPII-2.1.2	FlexRay	Klaus Bergdolt	FlexRay State Manager
WPII-2.1.1	COM	Hannes Haas	CAN Network Management
WPII-2.1.1	COM	Pascale Morizur	J1939
WPII-2.1.1	COM	Alex Lunkenheimer	SWS_EthernetDriver
WPII-2.1.1	COM	Alex Lunkenheimer	SWS_EthernetInterface
WPII-2.1.1	COM	Alex Lunkenheimer	SWS_EthernetTransceiver
WPII-1.1.1	Compiler Abstraction	Tobias Schmid	SWS_CompilerAbstraction
WPII-1.1.1	IOHWAB	Christoph Ederer	SWS_IOHardwareAbstraction
WPII-5.3	SPAL	Roger Engoulou	SWS_ICU_Driver

© 2009. Vector Informatik GmbH. All rights reserved. Any distribution or copying is subject to prior written approval by Vector.

火龙果•整理
uml.org.cn

Targets and Goals

- Standardize Development Process and exchange formats
  - >>> Methodology + Templates
- Standardize Functionality
  - >>> Functional Interfaces
- Define open reference architecture for ECU software
  - >>> Basic Software
- Specify a clear interface between basic software modules and application
  - >>> RTE

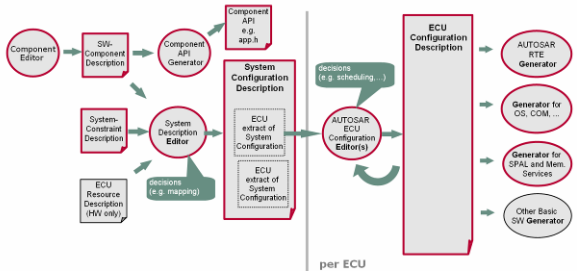

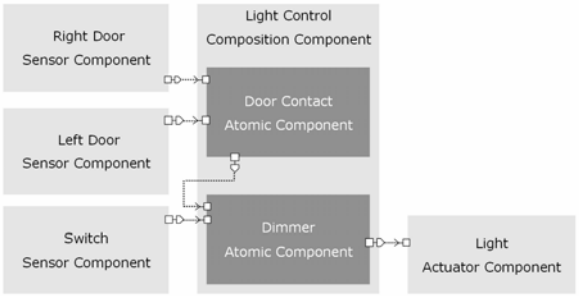

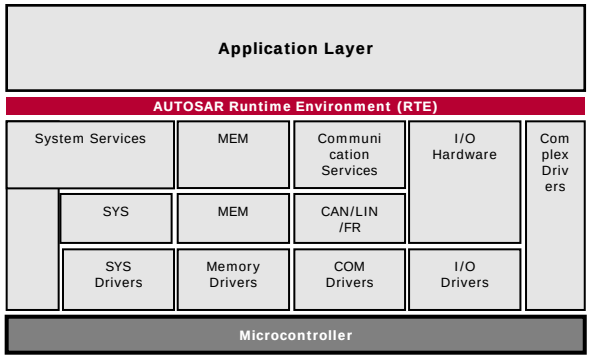

© 2009. Vector Informatik GmbH. All rights reserved. Any distribution or copying is subject to prior written approval by Vector.

火龙果•整理
uml.org.cn

Design Example – Component View

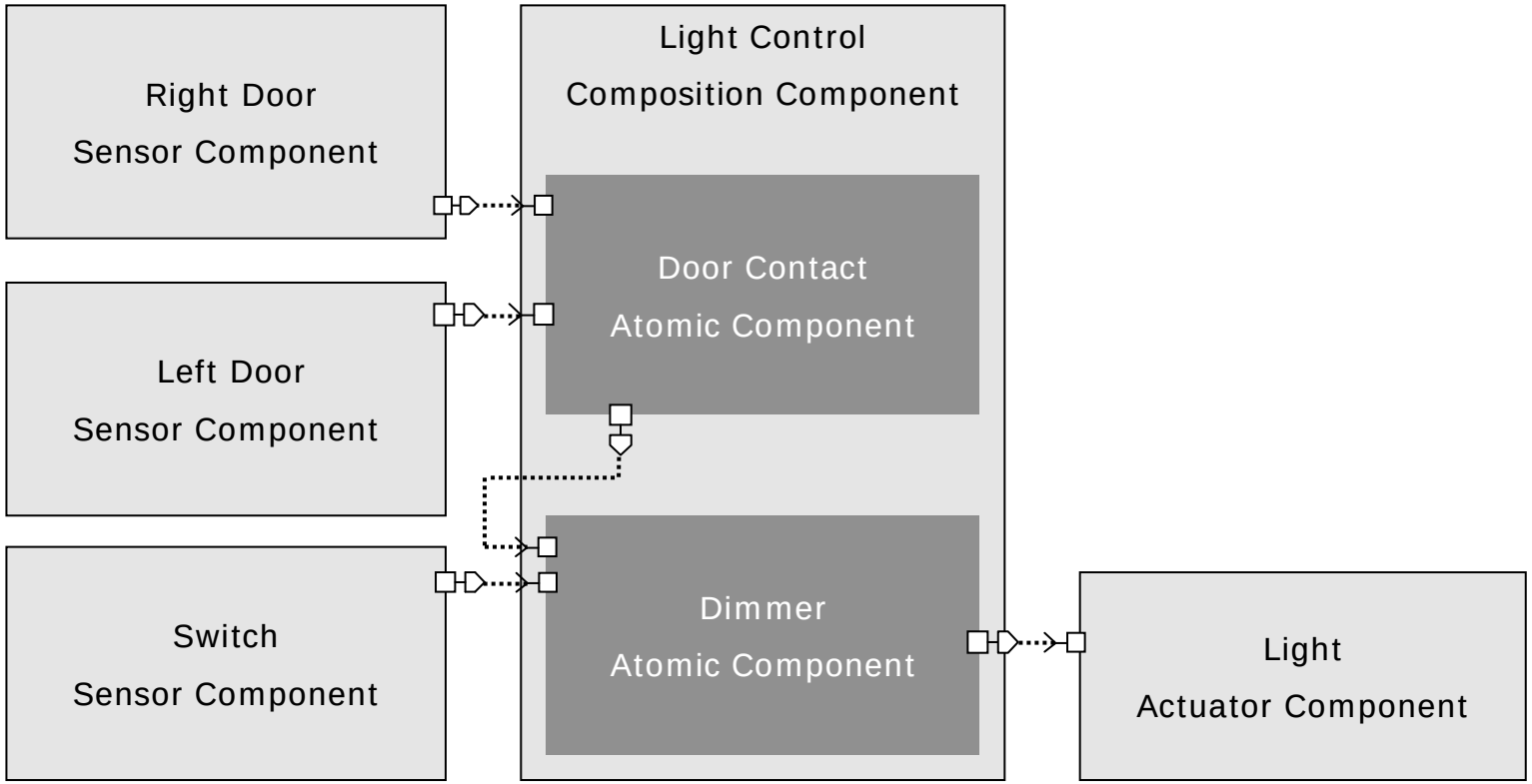

© 2009. Vector Informatik GmbH. All rights reserved. Any distribution or copying is subject to prior written approval by Vector.

火龙果•整理
uml.org.cn

Design Example - Virtual Function Bus View

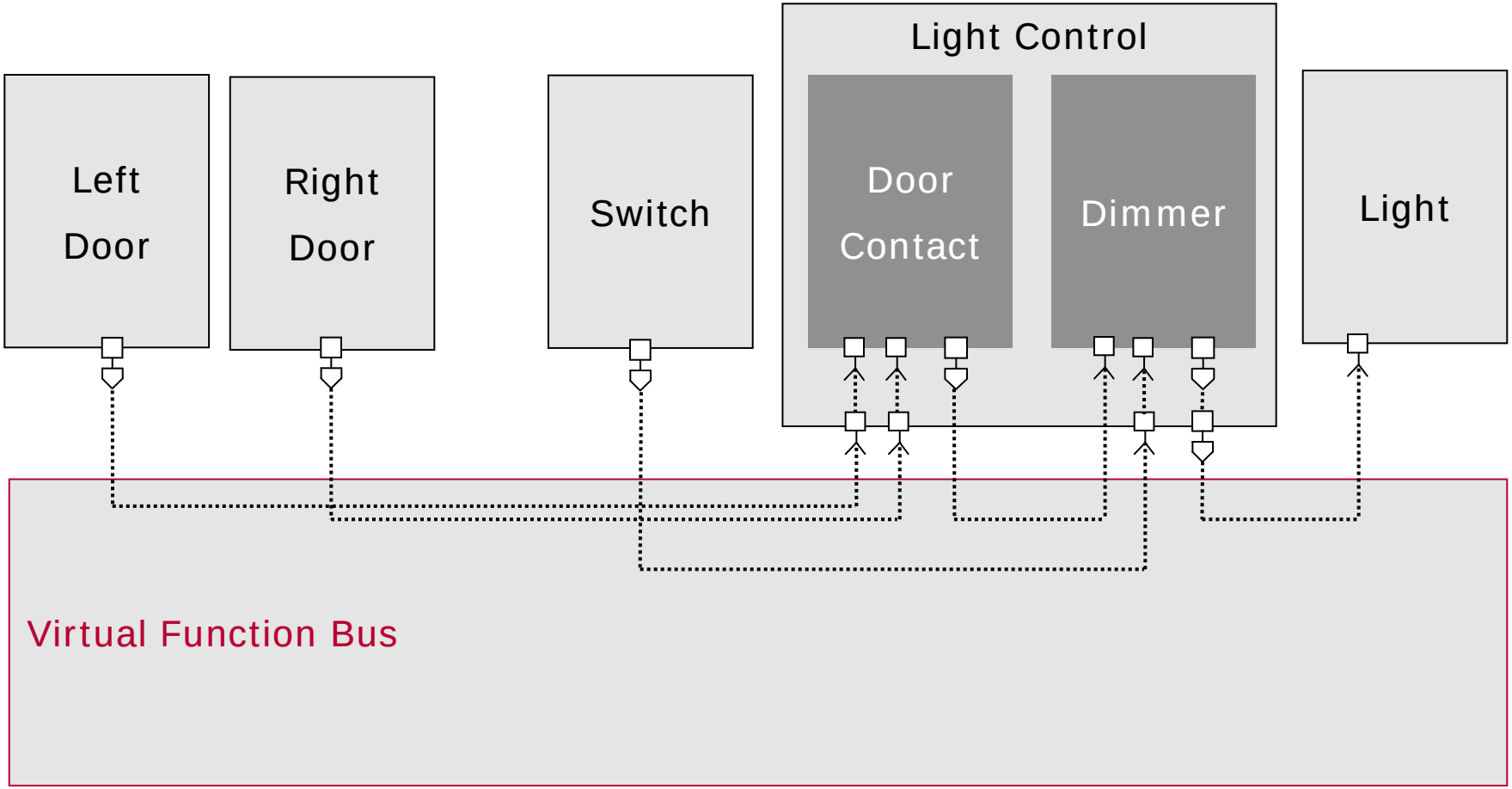

© 2009. Vector Informatik GmbH. All rights reserved. Any distribution or copying is subject to prior written approval by Vector.

火龙果•整理
uml.org.cn

Design Example - Mapped System

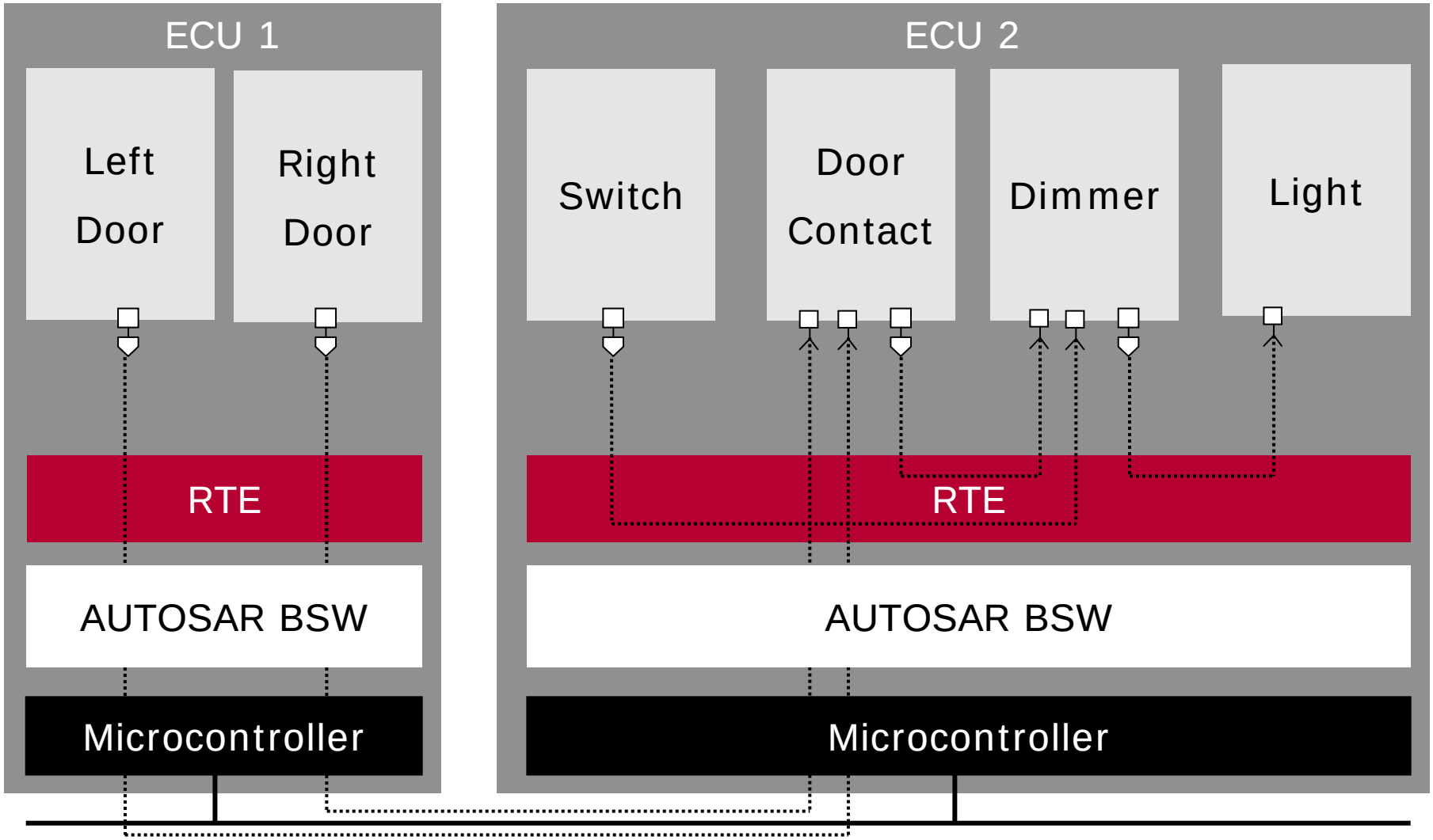

© 2009. Vector Informatik GmbH. All rights reserved. Any distribution or copying is subject to prior written approval by Vector.

火龙果•整理
uml.org.cn

Agenda

Introduction to AUTOSAR

> **System Design**

Application Software Components

MICROSAR Basic Software

AUTOSAR Services

Customers and Reference project

Summary

© 2009. Vector Informatik GmbH. All rights reserved. Any distribution or copying is subject to prior written approval by Vector.

火龙果•整理
uml.org.cn

System Design

Vector‘s AUTOSAR Tools in the development cycle

Workflows and System Design

Design of a complete system (e.g. all ECUs on a CAN bus)

OEM

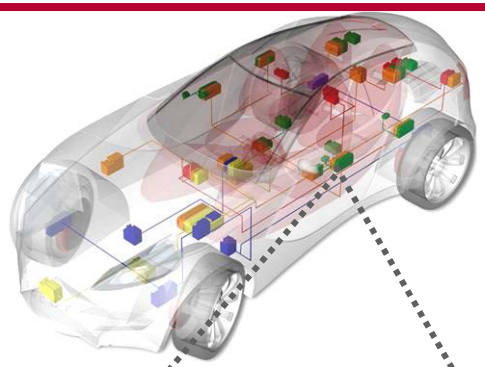

ECU Supplier

DaVinci Developer

AUTOSAR SWC (Software Component) design and RTE configuration

DaVinci Configurator Pro

AUTOSAR basic software configuration

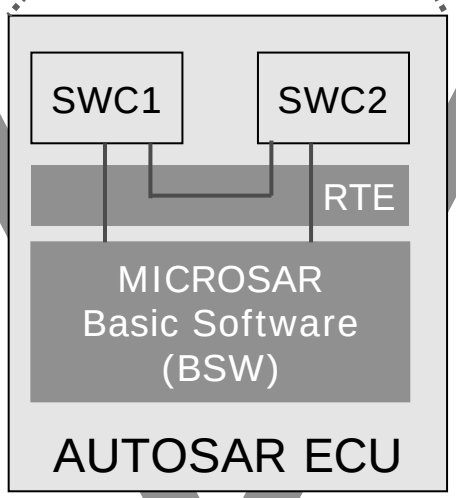

DaVinci Component Tester

Test of SWC on the PC

© 2009. Vector Informatik GmbH. All rights reserved. Any distribution or copying is subject to prior written approval by Vector.

火龙果•整理
uml.org.cn

System Design

Workflows and Tool Chain Integration

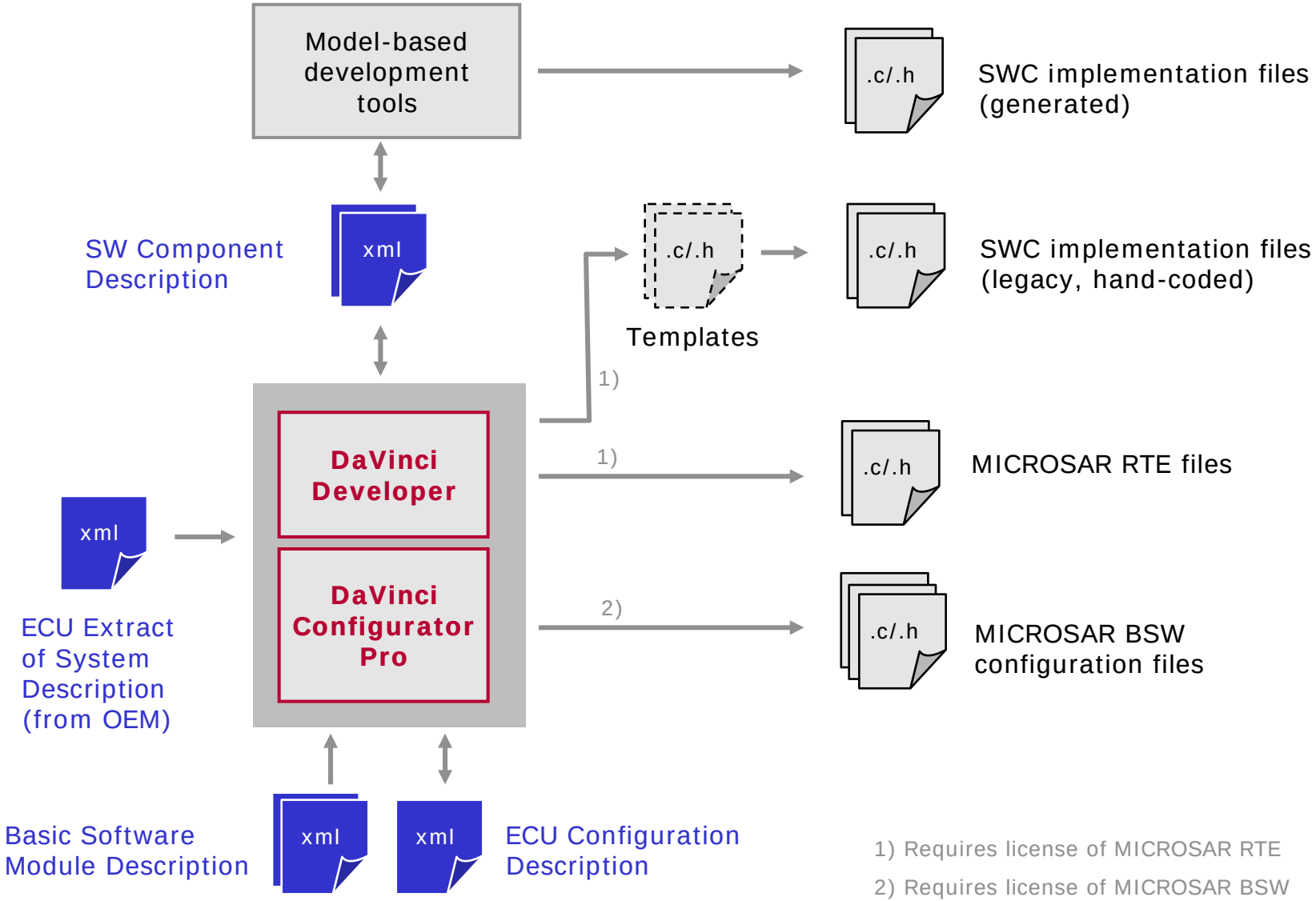

1) Requires license of MICROSAR RTE

2) Requires license of MICROSAR BSW

© 2009. Vector Informatik GmbH. All rights reserved. Any distribution or copying is subject to prior written approval by Vector.

火龙果•整理
uml.org.cn

System Design

DaVinci Network Designer

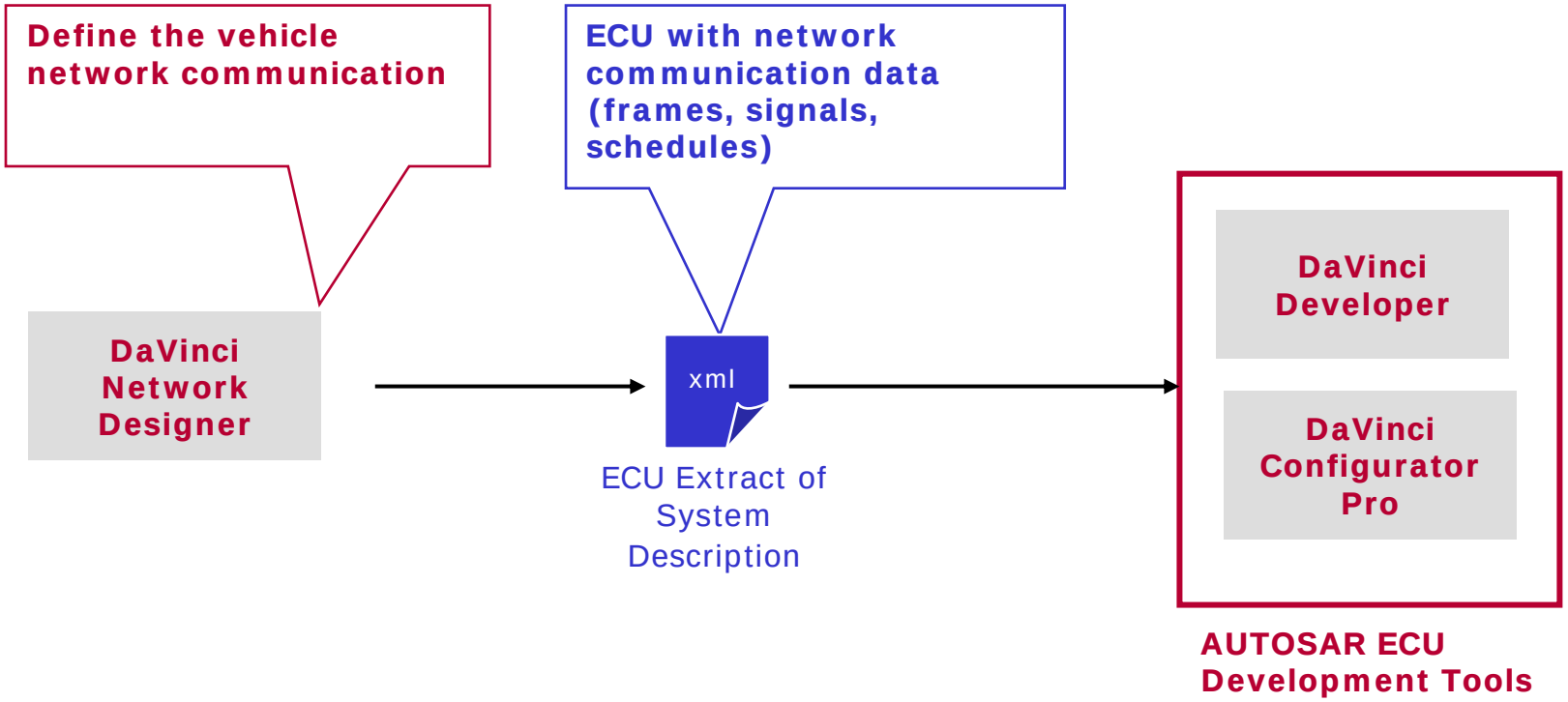

© 2009. Vector Informatik GmbH. All rights reserved. Any distribution or copying is subject to prior written approval by Vector.

火龙果•整理
uml.org.cn

- Features of DaVinci Network Designer
  - Definition of network topology with ECUs
  - Specific tool features to define CAN, LIN and FlexRay networks
  - Definition of communication data (frames, signals)
  - Definition of communication schedules
  - Import/export of communication data in various standard formats
    - DBC, FIBEX, LDF
    - AUTOSAR XML (System Description, ECU Extract of System Description)

⇨ Desktop solution to define network communication matrices

© 2009. Vector Informatik GmbH. All rights reserved. Any distribution or copying is subject to prior written approval by Vector.

火龙果•整理
uml.org.cn

Agenda

Introduction to AUTOSAR

System Design

> **Application Software Components**

MICROSAR Basic Software

AUTOSAR Services

Customers and Reference project

Summary

© 2009. Vector Informatik GmbH. All rights reserved. Any distribution or copying is subject to prior written approval by Vector.

火龙果•整理
uml.org.cn

Application Software Components

Vector‘s AUTOSAR Tools in the development cycle

Workflows and System Design

Design of a complete system (e.g. all ECUs on a CAN bus)

OEM

ECU Supplier

DaVinci Developer

AUTOSAR SWC (Software Component) design and RTE configuration

DaVinci Configurator Pro

AUTOSAR basic software configuration

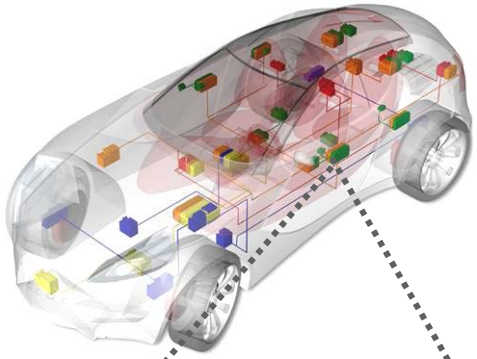

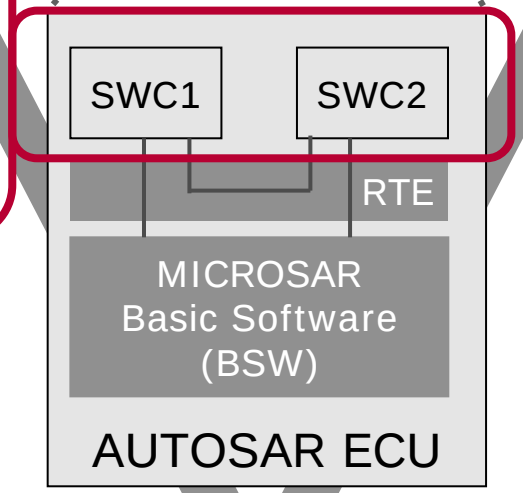

DaVinci Component Tester

Test of SWC on the PC

© 2009. Vector Informatik GmbH. All rights reserved. Any distribution or copying is subject to prior written approval by Vector.

火龙果•整理
uml.org.cn

Application Software Components

DaVinci Developer: SWC Design

Graphical editor for definition and integration of SW components

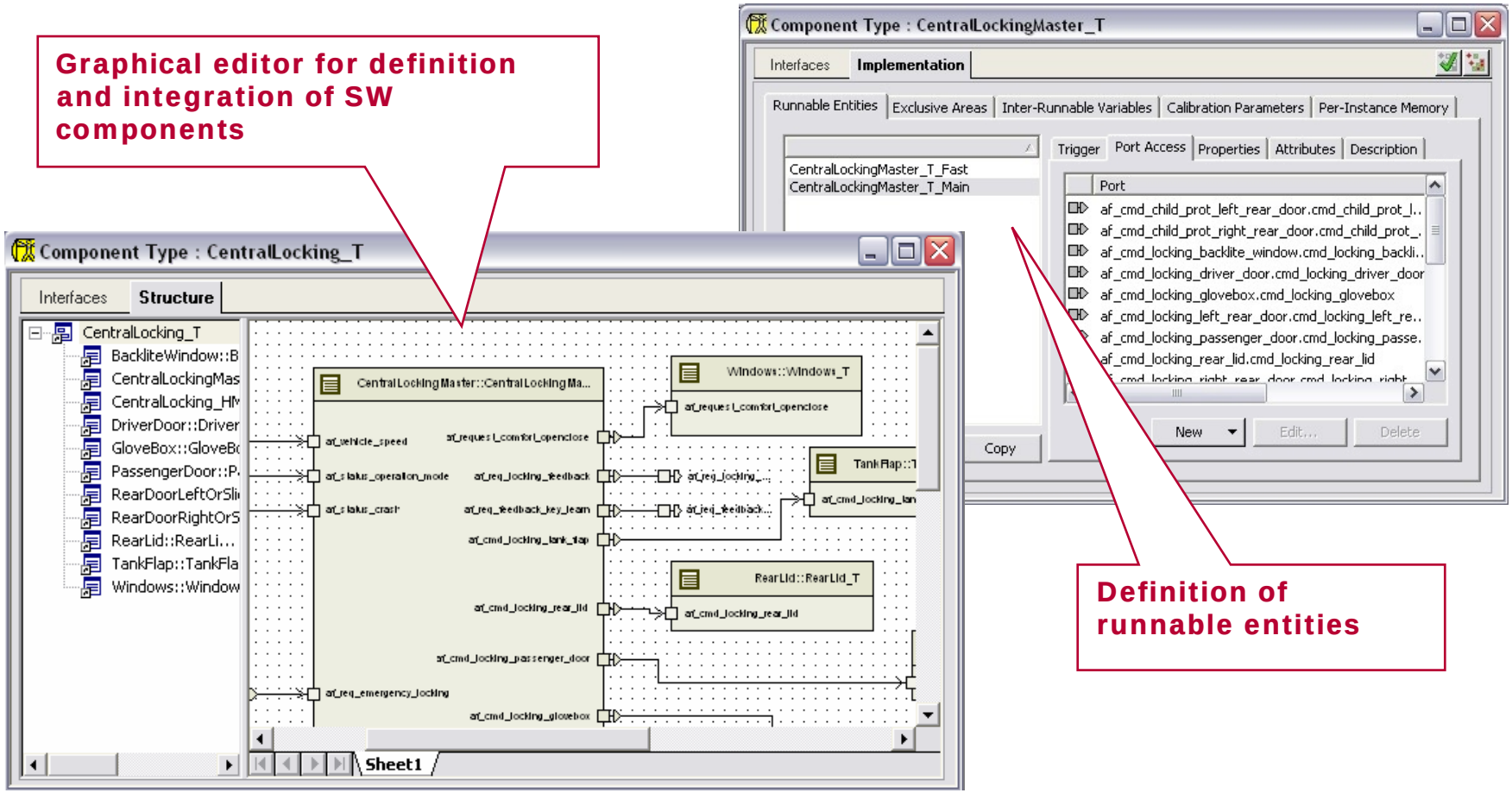

Definition of runnable entities

© 2009. Vector Informatik GmbH. All rights reserved. Any distribution or copying is subject to prior written approval by Vector.

火龙果•整理
uml.org.cn

Application Software Components

DaVinci Developer: Interface to model-based development tools

Example: Simulink

Simulink

- Develop the behavior model
- Generate SWC implementation code

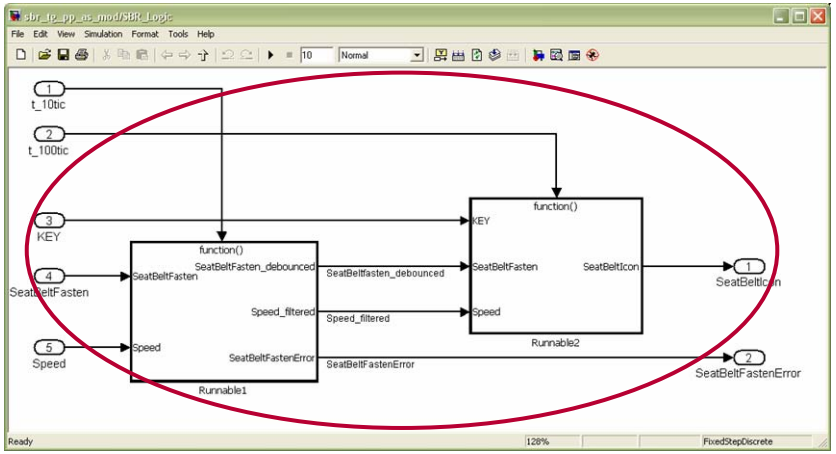

SWC description (e.g. ports, runnables) is exchanged via AUTOSAR XML

DaVinci Developer

- Integrate the SWC into the ECU SW architecture
- Configure the RTE

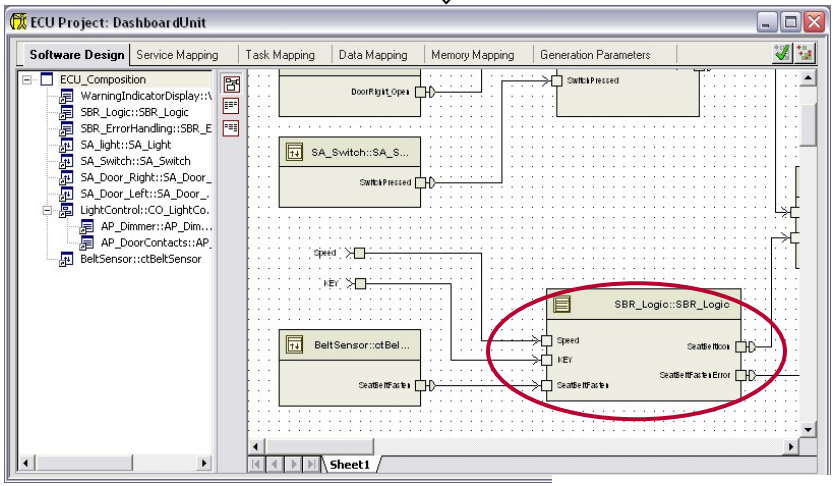

© 2009. Vector Informatik GmbH. All rights reserved. Any distribution or copying is subject to prior written approval by Vector.

火龙果•整理
uml.org.cn

Application Software Components

Vector‘s AUTOSAR Tools in the development cycle

Workflows and System Design

Design of a complete system (e.g. all ECUs on a CAN bus)

OEM

ECU Supplier

DaVinci Developer

AUTOSAR SWC (Software Component) design and RTE configuration

DaVinci Configurator Pro

AUTOSAR basic software configuration

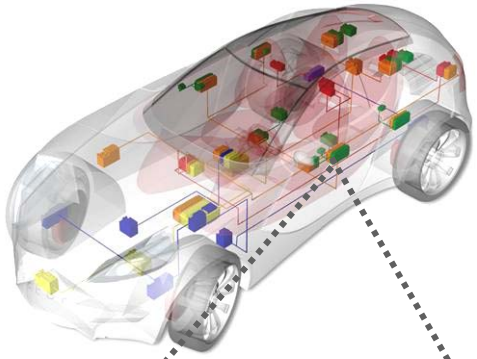

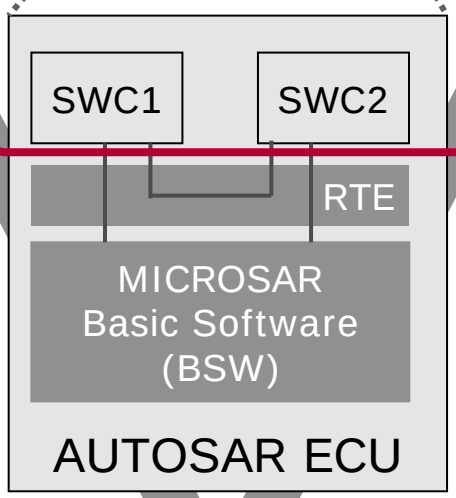

DaVinci Component Tester

Test of SWC on the PC

© 2009. Vector Informatik GmbH. All rights reserved. Any distribution or copying is subject to prior written approval by Vector.

火龙果•整理
uml.org.cn

DaVinci Component Tester: Concept

- Goal: **test of functional SWC behavior** on the PC
- Solution: DaVinci Component Tester
  - Emulates the RTE
  - Executes the original SWC implementation, compiled for the PC
  - Short turnaround time: dynamically configured via AUTOSAR XML
  - Test of atomic SWC or compositions possible
  - Open interface to connect testing tools like CANoe or NUnit (an open source tool)

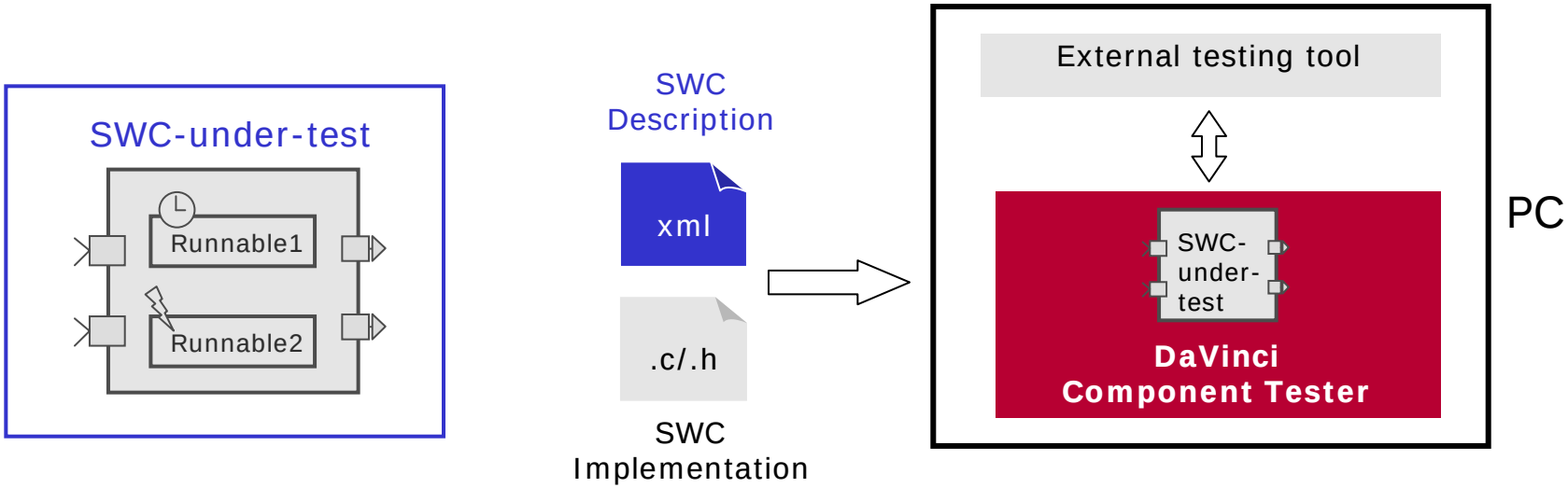

© 2009. Vector Informatik GmbH. All rights reserved. Any distribution or copying is subject to prior written approval by Vector.

火龙果•整理
uml.org.cn

Application Software Components

Vector‘s AUTOSAR Tools in the development cycle

Workflows and System Design

Design of a complete system (e.g. all ECUs on a CAN bus)

OEM

ECU Supplier

DaVinci Developer

AUTOSAR SWC (Software Component) design and RTE configuration

DaVinci Configurator Pro

AUTOSAR basic software configuration

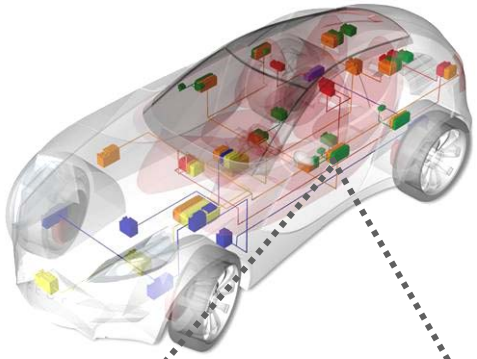

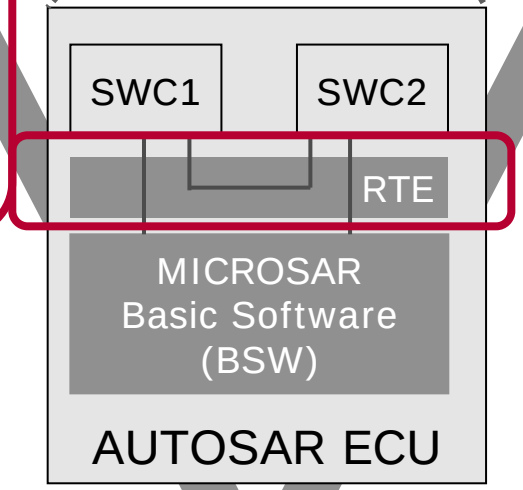

DaVinci Component Tester

Test of SWC on the PC

© 2009. Vector Informatik GmbH. All rights reserved. Any distribution or copying is subject to prior written approval by Vector.

火龙果•整理
uml.org.cn

Application Software Components

DaVinci Developer: RTE Data Mapping and Service Mapping

Service mapping: Connect the applications with the service components of the ECU basic software

Data mapping: Map SWC ports to network signals

ECU Project: IgnitionControlUnit

Software Design | **Service Mapping** | Task Mapping | Data Mapping | Memory Mapping | Generation Parameters

Application Component	Port	Port Interface	Service Component	Port	Port Interface
SA_IgnitionSwitch	UserRequest	UserRequest	ICU_ComM	UR000	UserRequest
SA_LightSwitch	UserRequest	UserRequest	ICU_ComM	UR001	UserRequest
_WarningLightSwitch	UserRequest	UserRequest	ICU_ComM	UR002	UserRequest
_BatterySupervision	DcmBatteryVoltage	DcmBatteryVoltage	ICU_Dcm	Battery	DcmBatteryVoltag
_FlasherDirectionSwitch	DcmFlasherSwitch	DcmFlasherSwitch	ICU_Dcm	FlasherSwitch	DcmFlasherSwitch
_WarningLightSwitch	DcmWarningSwitch	DcmWarningSwitch	ICU_Dcm	WarningSwitch	DcmWarningSwitcl
_BatterySupervision	BatteryGetDataValu...	CallbackGetDataVal...	ICU_Dem	Voltage_GetDataV...	CallbackGetDataV
SA_BatterySupervision	BatteryHighMonitor	DiagnosticMonitor	ICU_Dem	DEM_BATTERY_HIGH	DiagnosticMonitor
SA_BatterySupervision	BatteryLowMonitor	DiagnosticMonitor	ICU_Dem	DEM_BATTERY_LOW	DiagnosticMonitor

ECU Project: IgnitionControlUnit

Software Design | Service Mapping | Task Mapping | **Data Mapping** | Memory Mapping | Generation Parameters

Data Element	Port	Direction	Network	Message	Network Signal
State	AP_FlasherAlgorithm.FlasherDirectionSwitch	Tx	CAN	Msg_FlasherSwitch	Sig_FlasherDirectionSwitch
State	AP_FlasherAlgorithm.FlasherWarningSwitch	Tx	CAN	Msg_FlasherSwitch	Sig_FlasherWarningSwitch
State	AP_FlasherAlgorithm.IgnitionSwitch	Tx	CAN	Msg_Ignition	Sig_IgnitionSwitch
State	AP_Light.IgnitionSwitch	Tx	CAN	Msg_Ignition	Sig_IgnitionSwitch
State	AP_Light.LightSwitch	Tx	CAN	Msg_LightSwitch	Sig_LighSwitchState

Signals imported via AUTOSAR XML (ECU Extract of System Description) or via legacy formats (DBC, FIBEX, LDF)

© 2009. Vector Informatik GmbH. All rights reserved. Any distribution or copying is subject to prior written approval by Vector.

火龙果•整理
uml.org.cn

Application Software Components

DaVinci Developer: Task mapping and RTE optimization

Task mapping of runnable entities

ECU Project: IgnitionControlUnit

Software Design | Service Mapping | **Task Mapping** | Data Mapping | Memory Mapping | Generation Parameters

Runnable Entity	Component
Invocation of WdgMService.Update...	
Periodically 50 msec	
IgnitionSwitchDriver	SA_IgnitionSwitch
LightSwitchDriver	SA_LightSwitch
FlasherSwitchDriver	SA_FlasherDirect...
Periodically 200 msec	
WarningSwitchDriver	SA_WarningLight...
Periodically 500 msec	
BatterySupervisor	SA_BatterySuper...
Unspecified	

Order Index	BswTask	HighPrioAppTask	LowPrioApp
1	ICU_Dcm_RunnableEntity	IgnitionSwitchDriver	tSA_BatterySuper
2	ICU_Dem_ClientRunnable	FlasherSwitchDriver	BatterySupervisor
3		LightSwitchDriver	
4		WarningSwitchDriver	
5			
6			
7			
8			
9			
10			

Task	Type	Prior
BswTask	Application	3
HighPrioAppTask	Application	2
LowPrioAppTask	Application	1
SensorTask	Application	4

Definition of tasks

ECU Project: IgnitionControlUnit

Software Design | Service Mapping | Task Mapping | Data Mapping | Memory Mapping | **Generation Parameters**

ECU_Composition
- SA_IgnitionSwitch::tSA_
- SA_WarningLightSwitch:
- SA_LightSwitch::tSA_Ligl
- SA_FlasherDirectionSwitc
- SA_BatterySupervision::
- IoHwAb::ICU_IoHwAb

Exclusive Area Implementation

Exclusive Area	Implementation Mechanism
EA_Output	Interrupt Blocking
EA_ValueProcessing	Interrupt Blocking

Interrupt Blocking
OS Resource
Non-Preemptive Task
Cooperative Runnable Placement

Generation Parameters for RTE optimization

© 2009. Vector Informatik GmbH. All rights reserved. Any distribution or copying is subject to prior written approval by Vector.

火龙果•整理
uml.org.cn

Agenda

Introduction to AUTOSAR

System Design

Application Software Components

> **MICROSAR Basic Software**

AUTOSAR Services

Customers and Reference project

Summary

© 2009. Vector Informatik GmbH. All rights reserved. Any distribution or copying is subject to prior written approval by Vector.

火龙果•整理
uml.org.cn

MICROSAR Basic Software

Vector‘s AUTOSAR Tools in the development cycle

Workflows and System Design

Design of a complete system (e.g. all ECUs on a CAN bus)

OEM

ECU Supplier

DaVinci Developer

AUTOSAR SWC (Software Component) design and RTE configuration

DaVinci Configurator Pro

AUTOSAR basic software configuration

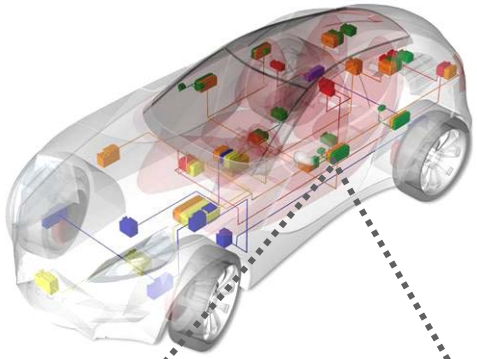

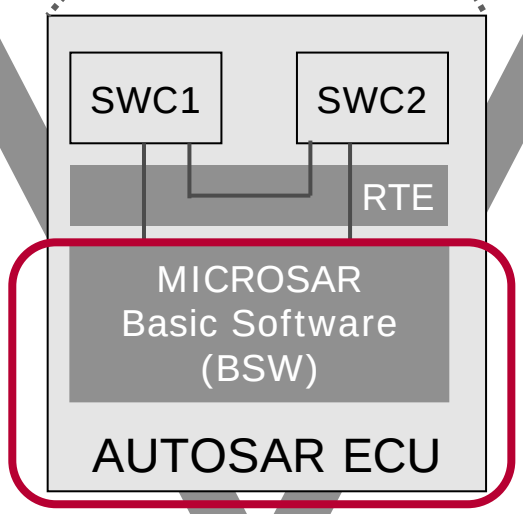

DaVinci Component Tester

Test of SWC on the PC

© 2009. Vector Informatik GmbH. All rights reserved. Any distribution or copying is subject to prior written approval by Vector.

火龙果•整理
uml.org.cn

MICROSAR Basic Software

Overview on Vectors Basic Software Products

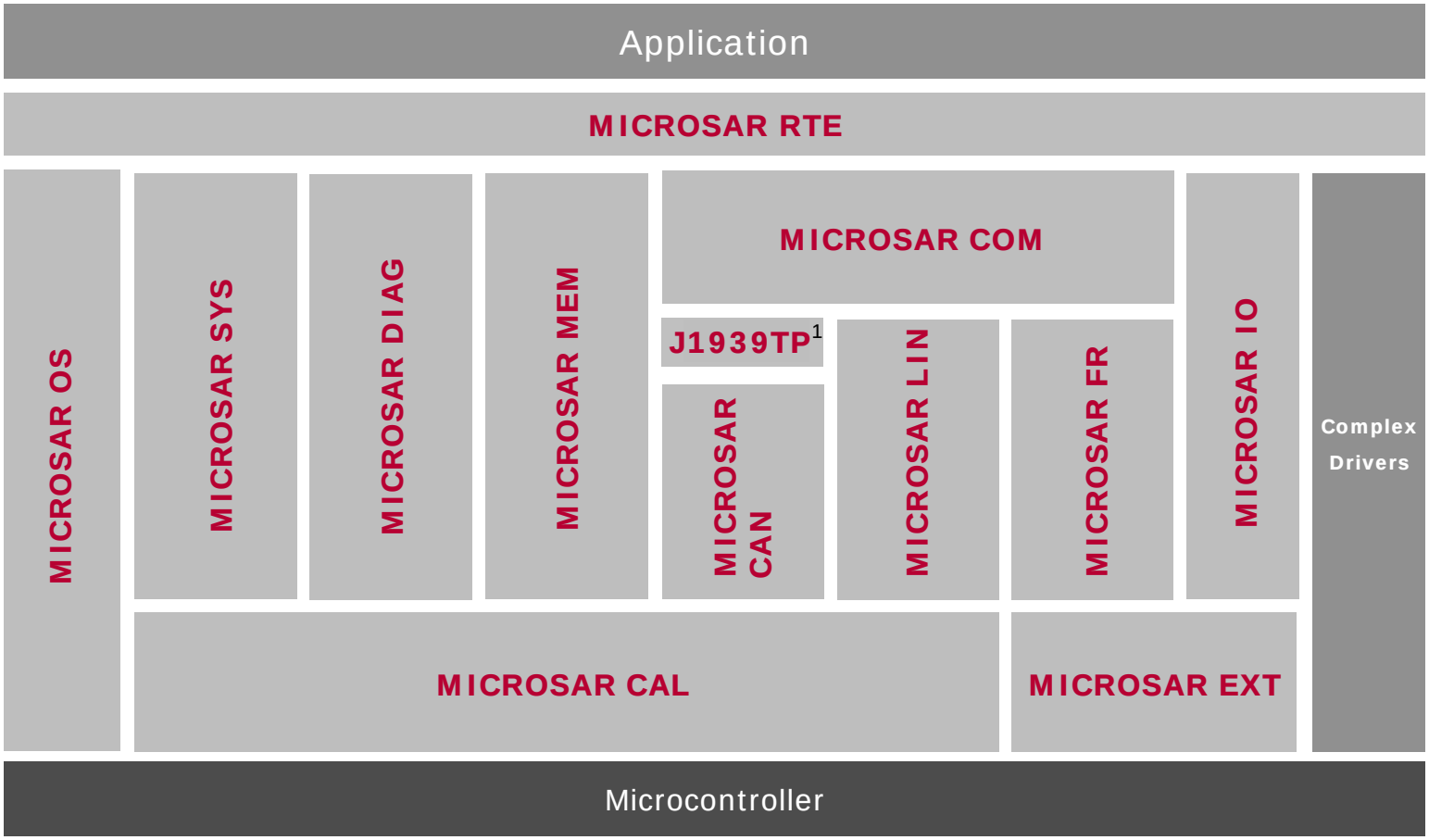

[1]Available extensions for AUTOSAR3.0

Standard Software

Project and services

© 2009. Vector Informatik GmbH. All rights reserved. Any distribution or copying is subject to prior written approval by Vector.

火龙果•整理
uml.org.cn

MICROSAR Basic Software

RTE – Run Time Environment

- Functions
  - Handles communication between SW components
  - Executes the SW components
  - Integrates the SW components with the BSW
  - Fully scalable – optimized for each ECU

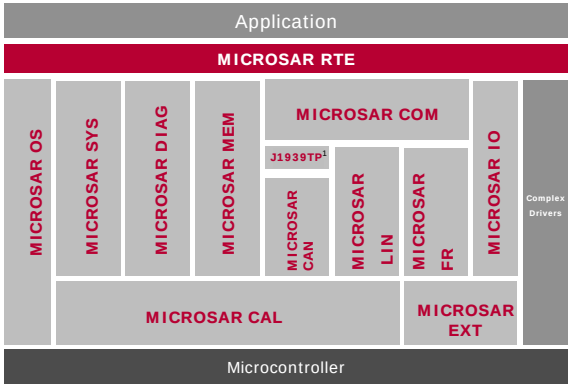

© 2009. Vector Informatik GmbH. All rights reserved. Any distribution or copying is subject to prior written approval by Vector.

火龙果•整理
uml.org.cn

OS - Operating System

- Functions
  - Scheduling of tasks
  - Call of non-trusted functions by applications with memory protection
  - Measurement of task run time and blocking time in addition to monitoring

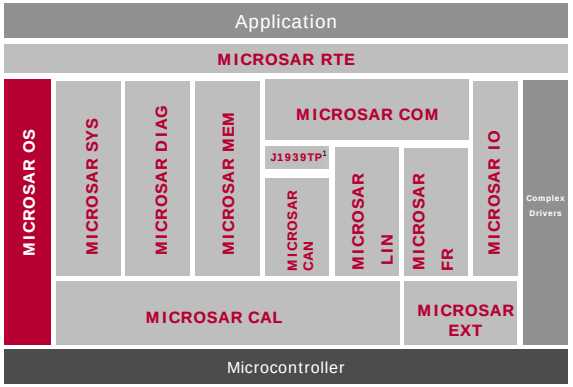

© 2009. Vector Informatik GmbH. All rights reserved. Any distribution or copying is subject to prior written approval by Vector.

火龙果•整理
uml.org.cn

SYS – System Services

- Functions
  - Managers for
    - Communication
    - ECU start-up and shut-down
    - Watchdog
    - Special diagnostic modes

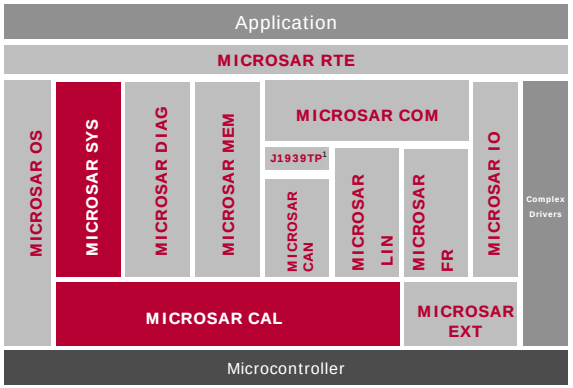

COMM

ECUM

CRC

SCHM

DET

WDGM

WDGIF

WDGDRV

GPTDRV

MCUDRV

© 2009. Vector Informatik GmbH. All rights reserved. Any distribution or copying is subject to prior written approval by Vector.

火龙果•整理
uml.org.cn

DIAG – Diagnostic Services

- Functions
  - Handling of diagnostic protocol UDS
  - Handling of error memory
  - Handling of active / passive mode

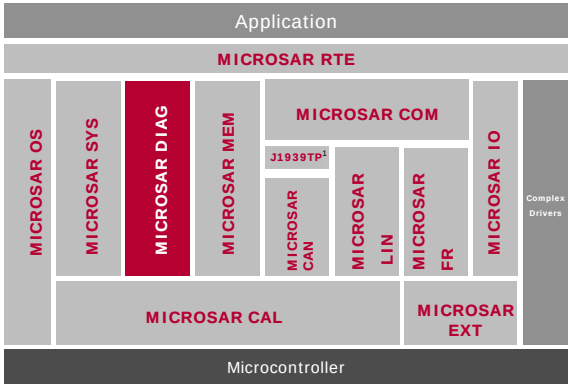

DEM

DCM

FIM

© 2009. Vector Informatik GmbH. All rights reserved. Any distribution or copying is subject to prior written approval by Vector.

火龙果•整理
uml.org.cn

MEM – Memory Services

- Functions
  - Access to the non-volatile RAM
  - Memory management for
    - EEPROM
    - Flash (by EEPROM simulation)
  - Supports internal and external EEPROM / Flash

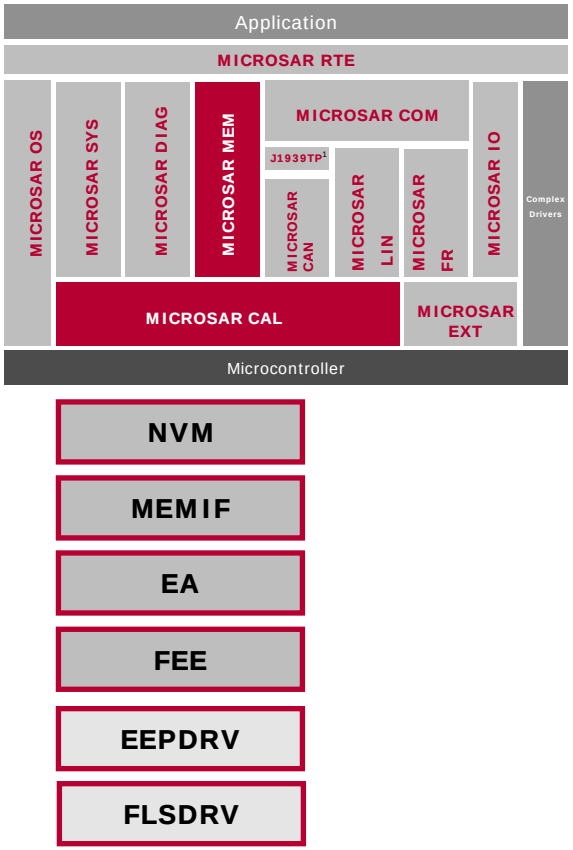

© 2009. Vector Informatik GmbH. All rights reserved. Any distribution or copying is subject to prior written approval by Vector.

火龙果•整理
uml.org.cn

CAN – CAN Communication Stack

- Functions
  - Communication services for CAN
    - Send and receive CAN messages
    - Transport protocol
    - Network management
    - Transceiver handling
    - Gateway functionality

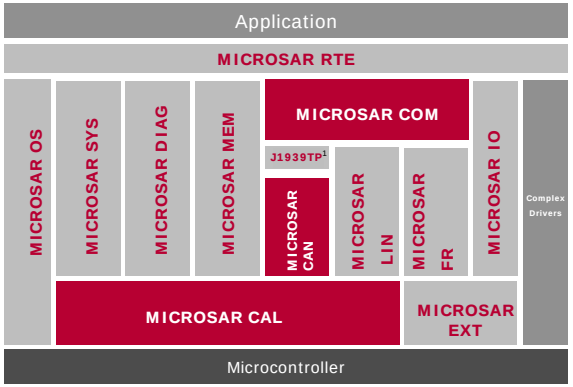

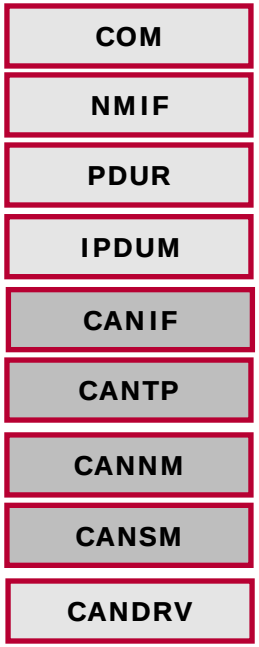

© 2009. Vector Informatik GmbH. All rights reserved. Any distribution or copying is subject to prior written approval by Vector.

火龙果•整理
uml.org.cn

LIN – LIN Communication Stack

- Functions
  - Communication services for LIN
    - Send and receive LIN messages
    - Transceiver handling
    - Gateway functionality

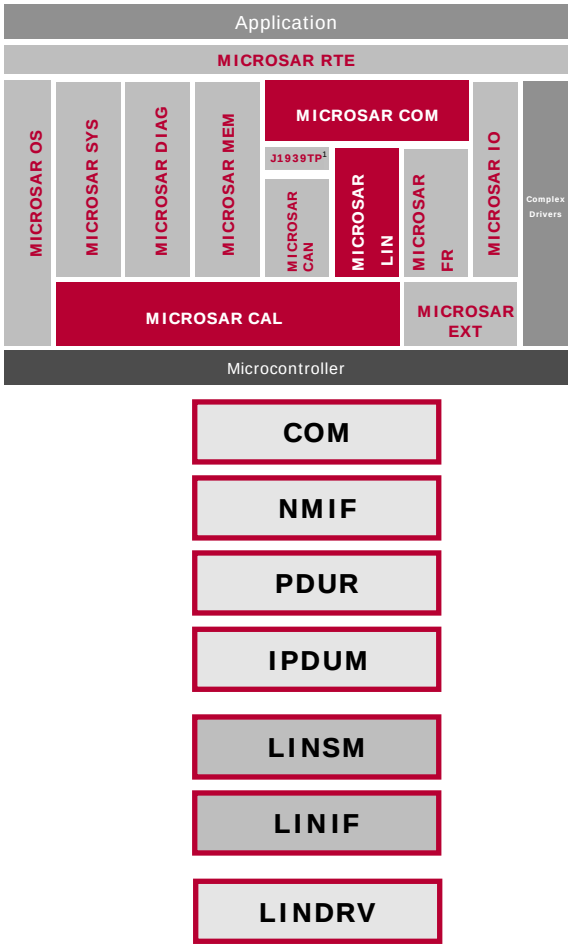

© 2009. Vector Informatik GmbH. All rights reserved. Any distribution or copying is subject to prior written approval by Vector.

火龙果•整理
uml.org.cn

FR – FlexRay Communication Stack

- Functions
  - Communication services for FlexRay
    - Send and receive FlexRay frames
    - Transport protocol
    - Network management
    - Transceiver handling
    - Gateway functionality

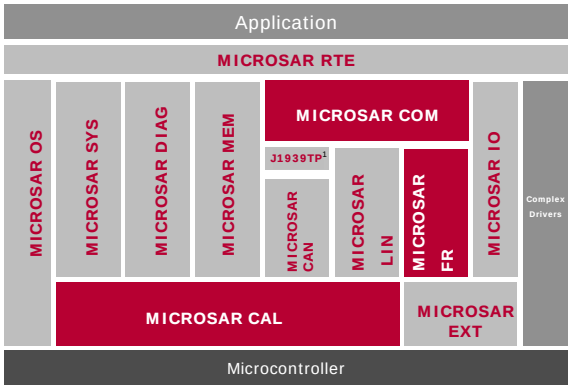

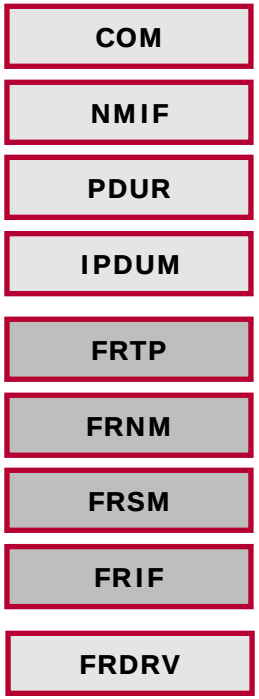

© 2009. Vector Informatik GmbH. All rights reserved. Any distribution or copying is subject to prior written approval by Vector.

火龙果•整理
uml.org.cn

IO – IO Stack

- Functions
  - Access to all peripherals of uC
  - Signal based interface for application

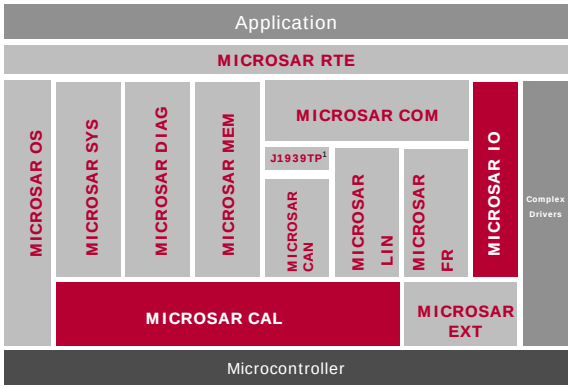

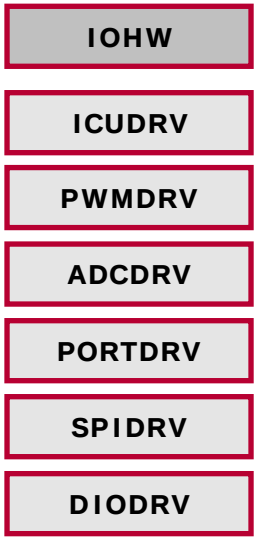

© 2009. Vector Informatik GmbH. All rights reserved. Any distribution or copying is subject to prior written approval by Vector.

火龙果•整理
uml.org.cn

CAL – Microcontroller Abstraction Layer

- Functions
  - Abstraction of microcontroller for higher layers

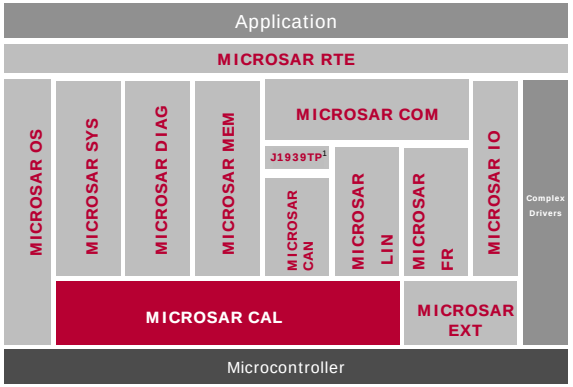

GPTDRV	FRDRV
WDGDRV	SPIDRV
MCUDRV	ICUDRV
EEPDRV	PWMDRV
FLSDRV	ADCDRV
CANDRV	PORTDRV
LINDRV	DIODRV

© 2009. Vector Informatik GmbH. All rights reserved. Any distribution or copying is subject to prior written approval by Vector.

火龙果•整理
uml.org.cn

EXT – External Hardware Abstraction

- Functions
  - Abstraction of external hardware

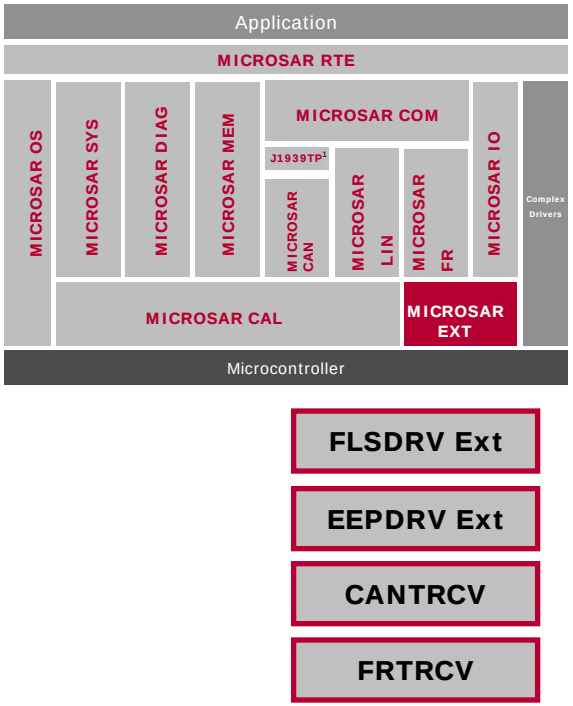

© 2009. Vector Informatik GmbH. All rights reserved. Any distribution or copying is subject to prior written approval by Vector.

火龙果•整理
uml.org.cn

MICROSAR Basic Software

Vector's full range of Basic Software Modules

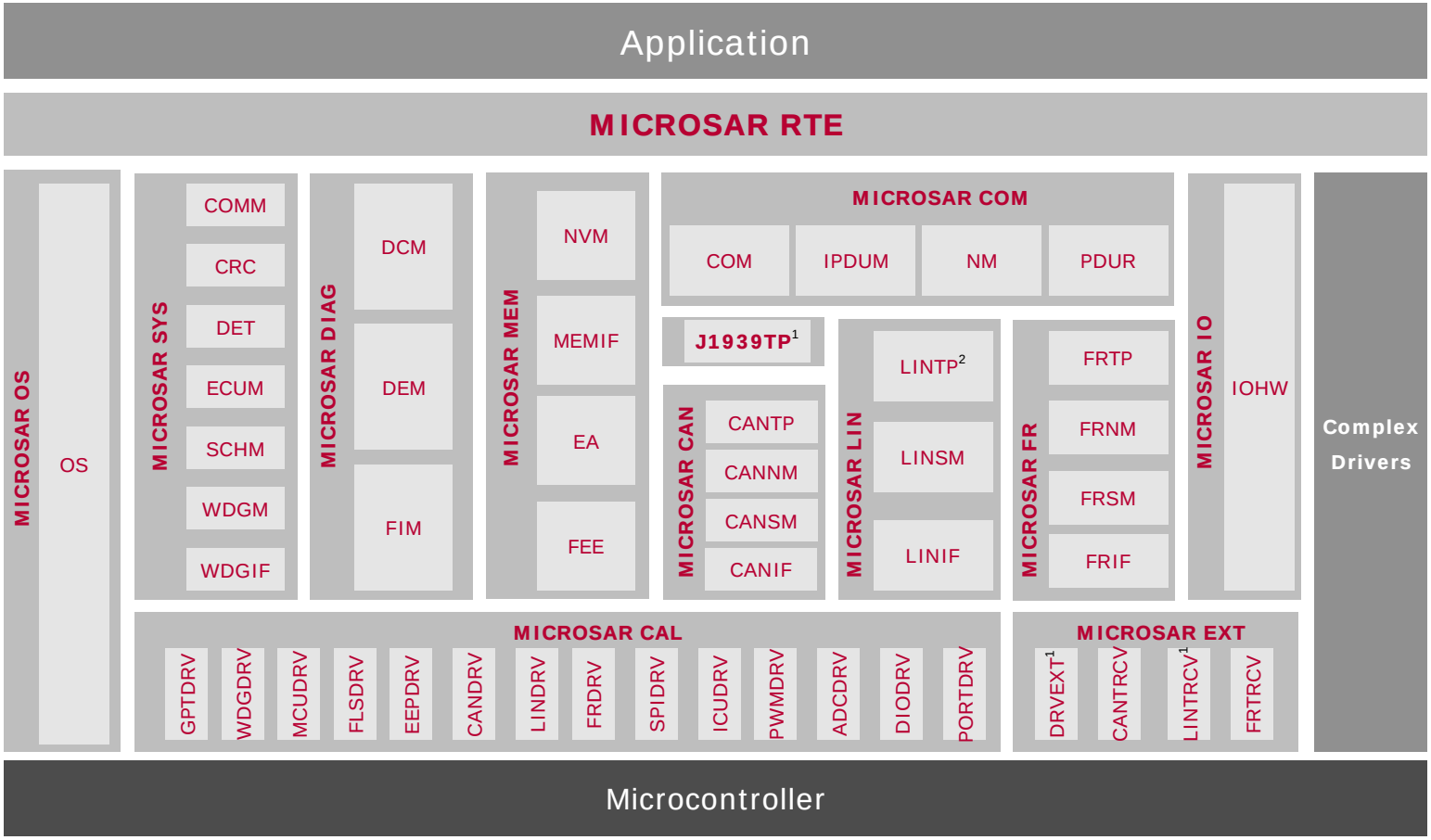

Standard Software

Project and services

[1]Available extensions for AUTOSAR3.0 BAM and CMDT Option available

[2]Option included in LINIF

© 2009. Vector Informatik GmbH. All rights reserved. Any distribution or copying is subject to prior written approval by Vector.

火龙果•整理
uml.org.cn

Large variety of platforms supported

- Vector cooperates with microcontroller manufacturers to integrate the MCAL (Microcontroller Abstraction Layer) which are provided by them
- An individual solution for your favored microcontroller is possible at any time
- Special solution available for early development phase: CANoe as PC experimental target

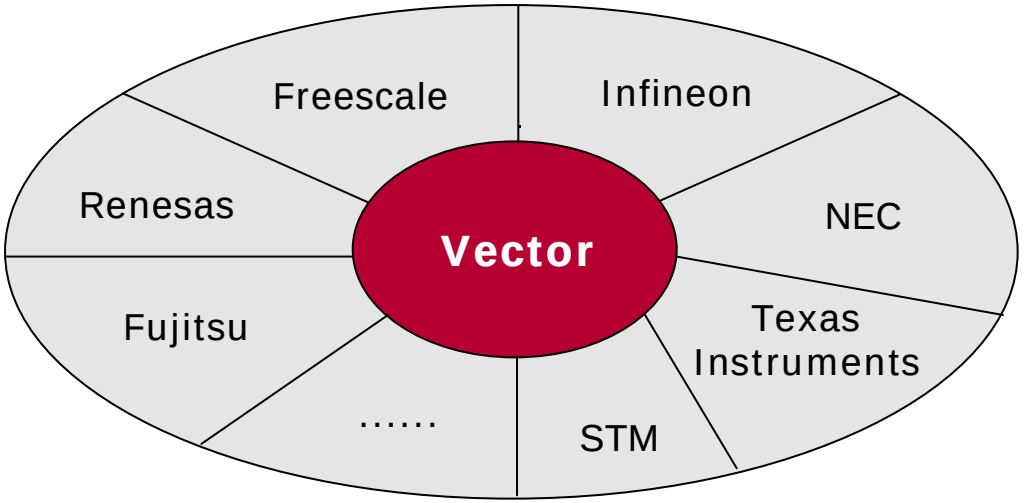

Examples:

- Freescale MPC, S12X
- NEC V850
- Fujitsu 16FX, MB91460
- TI TMS570
- Renesas R32C
- Infineon XC2000, TriCore
- And many more...

© 2009. Vector Informatik GmbH. All rights reserved. Any distribution or copying is subject to prior written approval by Vector.

火龙果•整理
uml.org.cn

MICROSAR Basic Software

- All current OEM AUTOSAR platforms are supported
  - OEM specific configuration concepts and tools
  - OEM specific add-ons
  - OEM specific licensing
  - OEM provided BSW modules and SWC
- Basic software for all OEMs is based on the same AUTOSAR 3.0 implementation
- Vector license model allows cost-sharing between AUTOSAR project between multiple OEMs
- AUTOSAR compliant extensions
  - Ethernet / TCP/IP
  - MOST
  - J1939
  - XCP

© 2009. Vector Informatik GmbH. All rights reserved. Any distribution or copying is subject to prior written approval by Vector.

火龙果•整理
uml.org.cn

MICROSAR Basic Software

Vector‘s AUTOSAR Tools in the development cycle

Workflows and System Design

Design of a complete system (e.g. all ECUs on a CAN bus)

OEM

ECU Supplier

DaVinci Developer

AUTOSAR SWC (Software Component) design and RTE configuration

DaVinci Configurator Pro

AUTOSAR basic software configuration

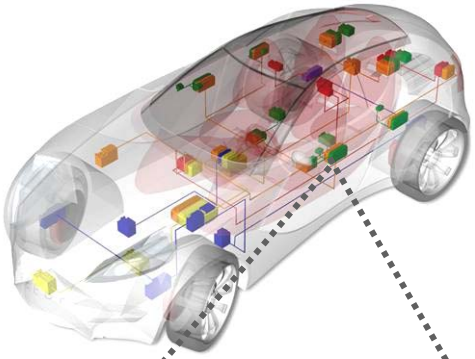

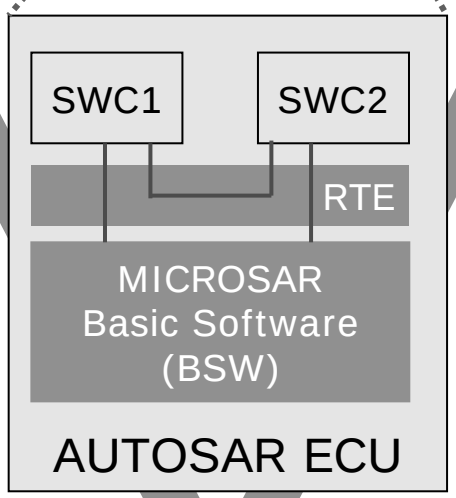

DaVinci Component Tester

Test of SWC on the PC

© 2009. Vector Informatik GmbH. All rights reserved. Any distribution or copying is subject to prior written approval by Vector.

火龙果•整理
uml.org.cn

MICROSAR Basic Software

DaVinci Configurator Pro: AUTOSAR compliant configuration tool

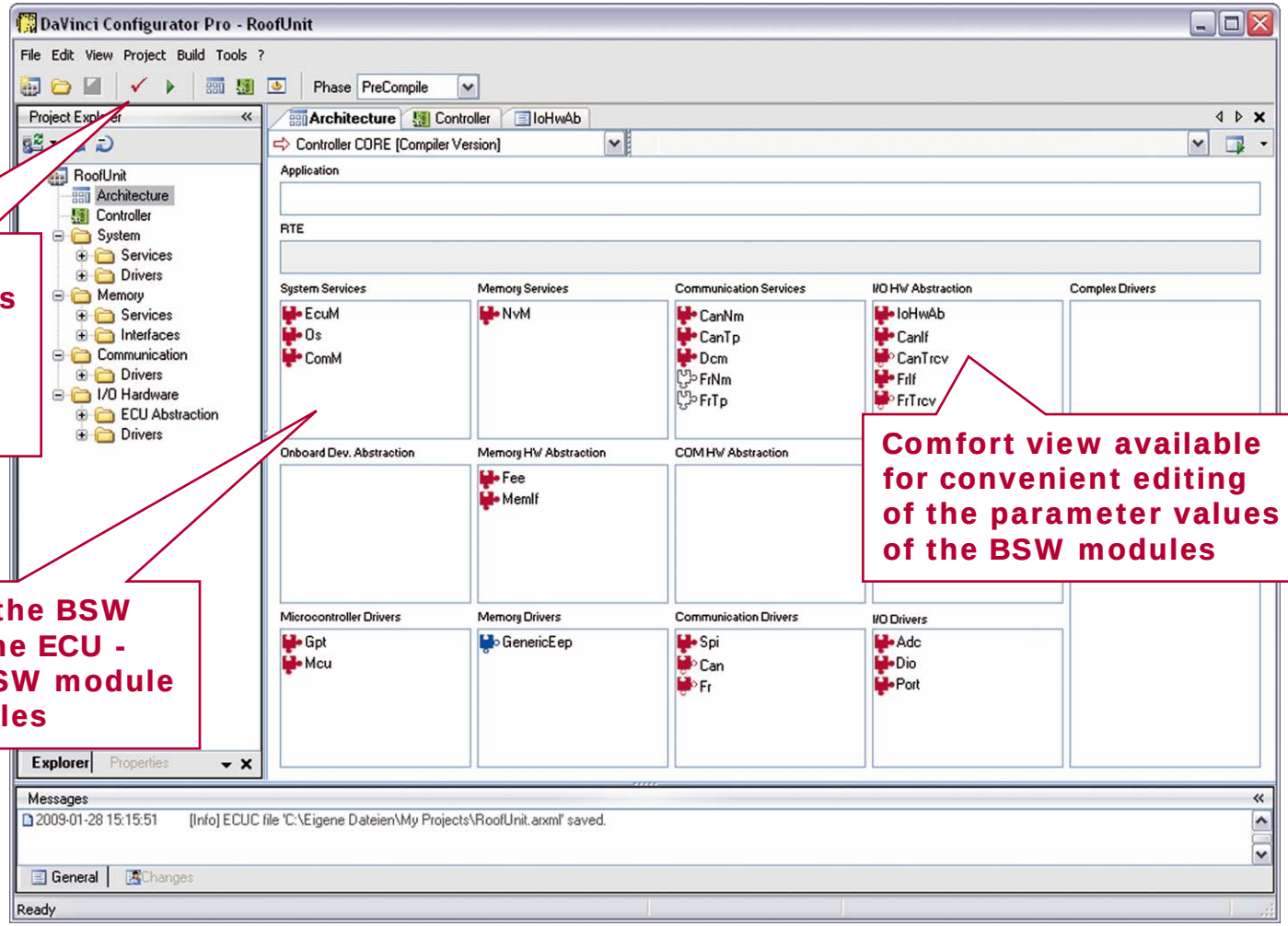

Consistency of parameter values ensured by rule-based validation concept

Overview of the BSW modules in the ECU - defined by BSW module description files

Comfort view available for convenient editing of the parameter values of the BSW modules

© 2009. Vector Informatik GmbH. All rights reserved. Any distribution or copying is subject to prior written approval by Vector.

火龙果•整理
uml.org.cn

DaVinci Configurator Pro: Configuration of communication stack

GENy: Specialized tool for configuration of communication stack

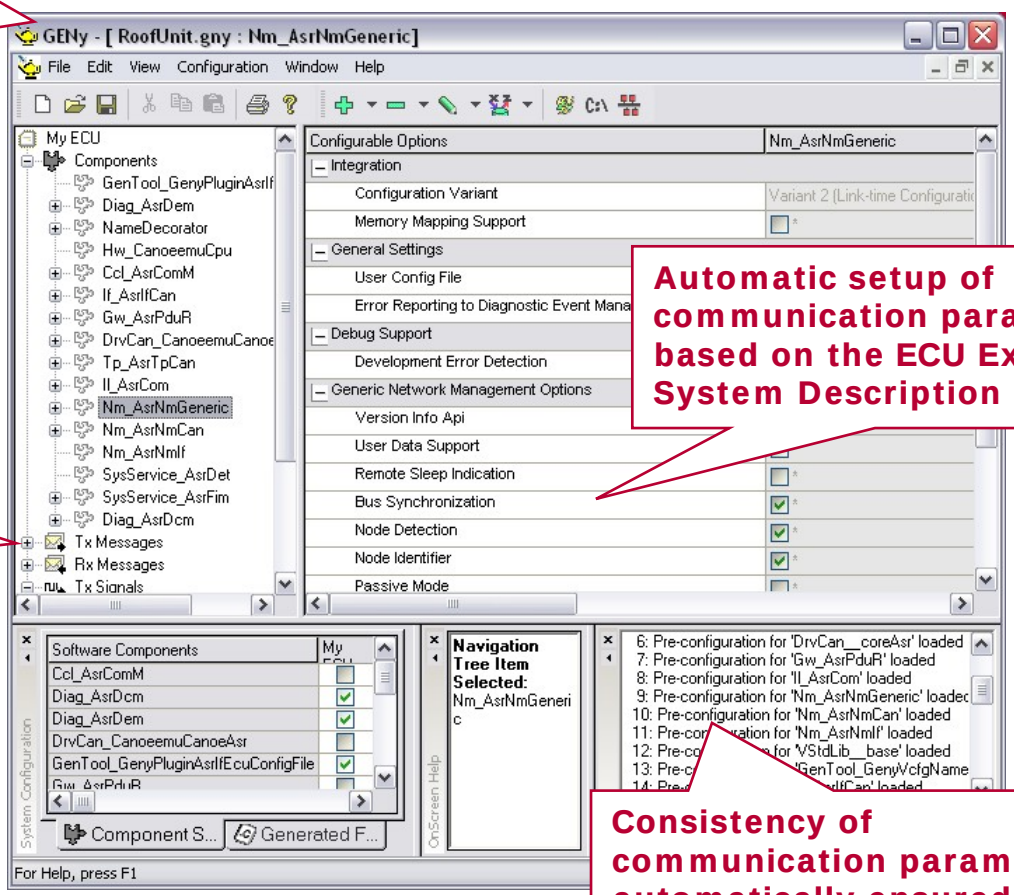

Specific views for configuring the communication frames and signals of the ECUs

Automatic setup of communication parameter based on the ECU Extract of System Description

Consistency of communication parameters automatically ensured

© 2009. Vector Informatik GmbH. All rights reserved. Any distribution or copying is subject to prior written approval by Vector.

火龙果•整理
uml.org.cn

Agenda

Introduction to AUTOSAR

System Design

Application Software Components

MICROSAR Basic Software

> **AUTOSAR Services**

Customers and Reference project

Summary

© 2009. Vector Informatik GmbH. All rights reserved. Any distribution or copying is subject to prior written approval by Vector.

火龙果•整理
uml.org.cn

AUTOSAR Services

Benefits

- Individual and Customized Services for your AUTOSAR Projects
  - > AUTOSAR Training
  - > MICROSAR Coaching
  - > AUTOSAR Workshops
  - > AUTOSAR Project work

- Complete solution from one hand
- Efficient acquisition of know-how
- Allows focus on application development

© 2009. Vector Informatik GmbH. All rights reserved. Any distribution or copying is subject to prior written approval by Vector.

火龙果•整理
uml.org.cn

Agenda

Introduction to AUTOSAR

System Design

Application Software Components

MICROSAR Basic Software

AUTOSAR Services

> **Customers and Reference project**

Summary

© 2009. Vector Informatik GmbH. All rights reserved. Any distribution or copying is subject to prior written approval by Vector.

火龙果•整理
uml.org.cn

Customers

Evaluation and Prototype Bundles

OEMs	Tier1s	Others
BMW	Conti	Australian Arrows
Daimler	Delphi	DGIST
GM India	Hella	ESG
Porsche	JCI	FH Dortmund
Toyota	MagnetiMarelli	Freescale
Volkswagen	Stoneridge AB	Renesas
	TRW	Uni Salzburg
	Yazaki	etc.
	etc.	

© 2009. Vector Informatik GmbH. All rights reserved. Any distribution or copying is subject to prior written approval by Vector.

火龙果•整理
uml.org.cn

Customers

Production Licenses*

- **Daimler Cars**
- **VOLVO AB**
- AMG
- Audi
- AVL
- Beru
- Continental
- Hella
- Johnson Controls
- Lear
- Liebherr
- Mecel AB
- Meta System
- TRW
- Volkswagen

Example:

Complete AUTOSAR solution for Volvo AB and its supplier

- Basic Software Modules
- Configuration Toolchain
- Code Generation
- J1939 included
- Training and Coaching for Volvo and their suppliers

* Includes deliveries as second source for further OEMs

© 2009. Vector Informatik GmbH. All rights reserved. Any distribution or copying is subject to prior written approval by Vector.

火龙果•整理
uml.org.cn

Reference Project

Project Overview

- Development of a Power-Shift Transmission Control System for 250hp Tractor
- Cooperation for SW Development between AVL and Vector
- AUTOSAR Reference Project for AVL
- J1939 integrated in AUTOSAR stack and used for Transport Protocol and Diagnostics

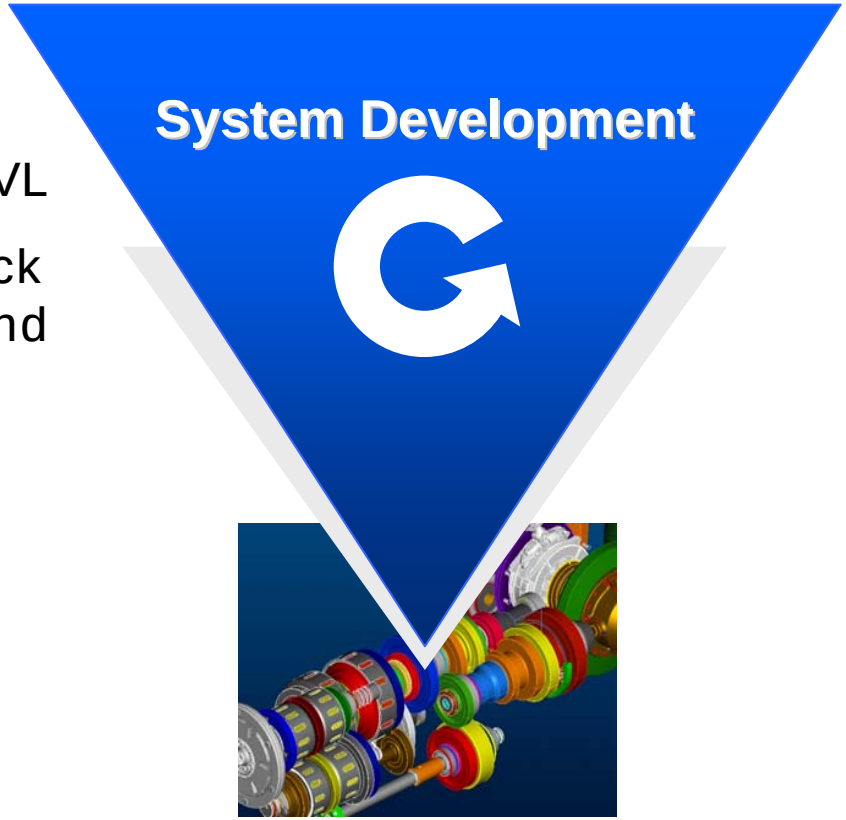

© 2009. Vector Informatik GmbH. All rights reserved. Any distribution or copying is subject to prior written approval by Vector.

火龙果•整理
uml.org.cn

Reference Project

Work Split 1/2

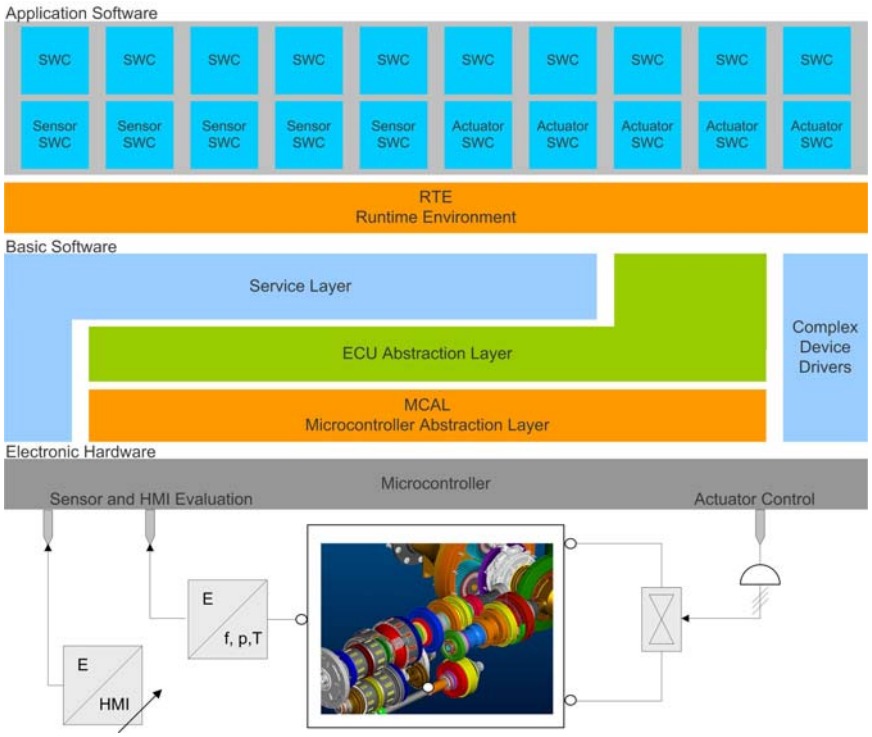

Application Software

- Specified and developed by AVL

Integration Control System Application

- Integration of Firmware and Application Software on Control System Platform
- Integration of Control System on mechanical System, e.g. Transmission incl. Hydraulic and Mechanic
- Integration of Control System and mechanical System into Vehicle

Integration Control System Basic Software

- Integration MCAL, Basic Software Modules, FBL, J1939, Complex Device Driver, … on Control Unit – Control System Platform

Firmware

- Specified by AVL, developed by AVL and Vector

© 2009. Vector Informatik GmbH. All rights reserved. Any distribution or copying is subject to prior written approval by Vector.

火龙果•整理
uml.org.cn

Reference Project

Work Split 2/2

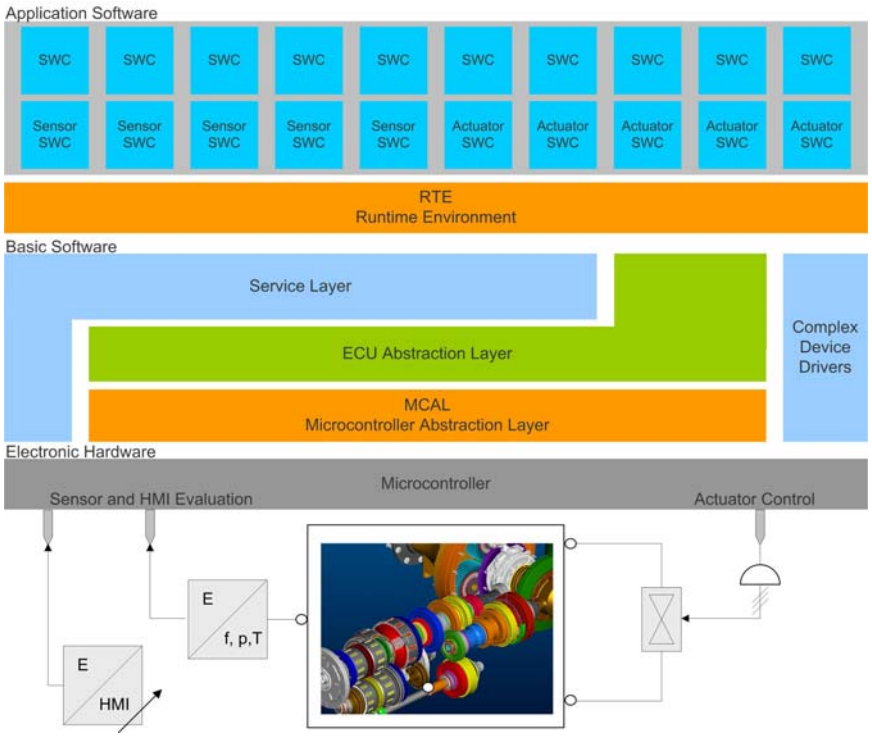

Basic Software

- AUTOSAR Basic Software Standard Core
- MCAL R.2.0 by µController Supplier
- ECU Abstraction, Service Layer R3.0 and Extensions for J1939, FBL and XCP

Electronic Hardware

- Specified by AVL, developed by Hardware Supplier

Sensors and Actuators

- Specified and integrated by AVL

Hydraulical- and Mechanical System

- Specified and designed by AVL

© 2009. Vector Informatik GmbH. All rights reserved. Any distribution or copying is subject to prior written approval by Vector.

火龙果•整理
uml.org.cn

Agenda

Introduction to AUTOSAR

System Design

Application Software Components

MICROSAR Basic Software

AUTOSAR Services

Customers and Reference project

> **Summary**

© 2009. Vector Informatik GmbH. All rights reserved. Any distribution or copying is subject to prior written approval by Vector.

火龙果•整理
uml.org.cn

Summary: Comprehensive solution for developing AUTOSAR ECUs

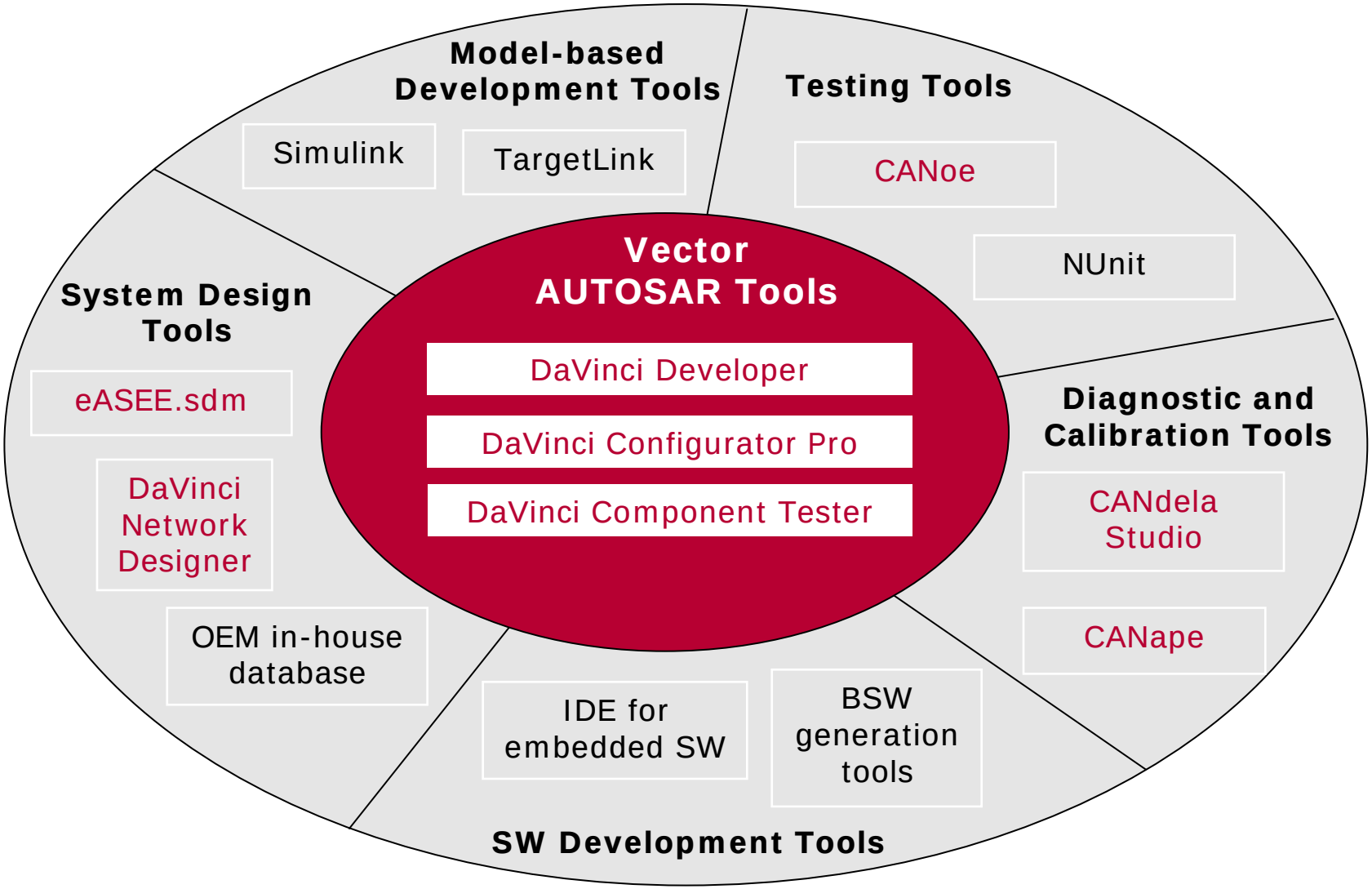

© 2009. Vector Informatik GmbH. All rights reserved. Any distribution or copying is subject to prior written approval by Vector.

火龙果•整理
uml.org.cn

Summary

Vector ...

- ... is part of AUTOSAR and has brought broad know how into AUTOSAR since the beginning
- ... continues to contribute know-how and man power to the AUTOSAR standardization
- ... products will be continuously developed to keep track with future technologies within AUTOSAR

© 2009. Vector Informatik GmbH. All rights reserved. Any distribution or copying is subject to prior written approval by Vector.

火龙果•整理
uml.org.cn

Thank you for your attention.

For detailed information about Vector

and our products please have a look at:

www.vector.com

Peter Liebscher

Director China Operations

Vector Informatik GmbH Shanghai Representative Office

Caobao Lu, Shanghai

© 2009. Vector Informatik GmbH. All rights reserved. Any distribution or copying is subject to prior written approval by Vector.

火龙果•整理
uml.org.cn