车身控制器设计方案（中级车）

Mid Range Platform Architecture

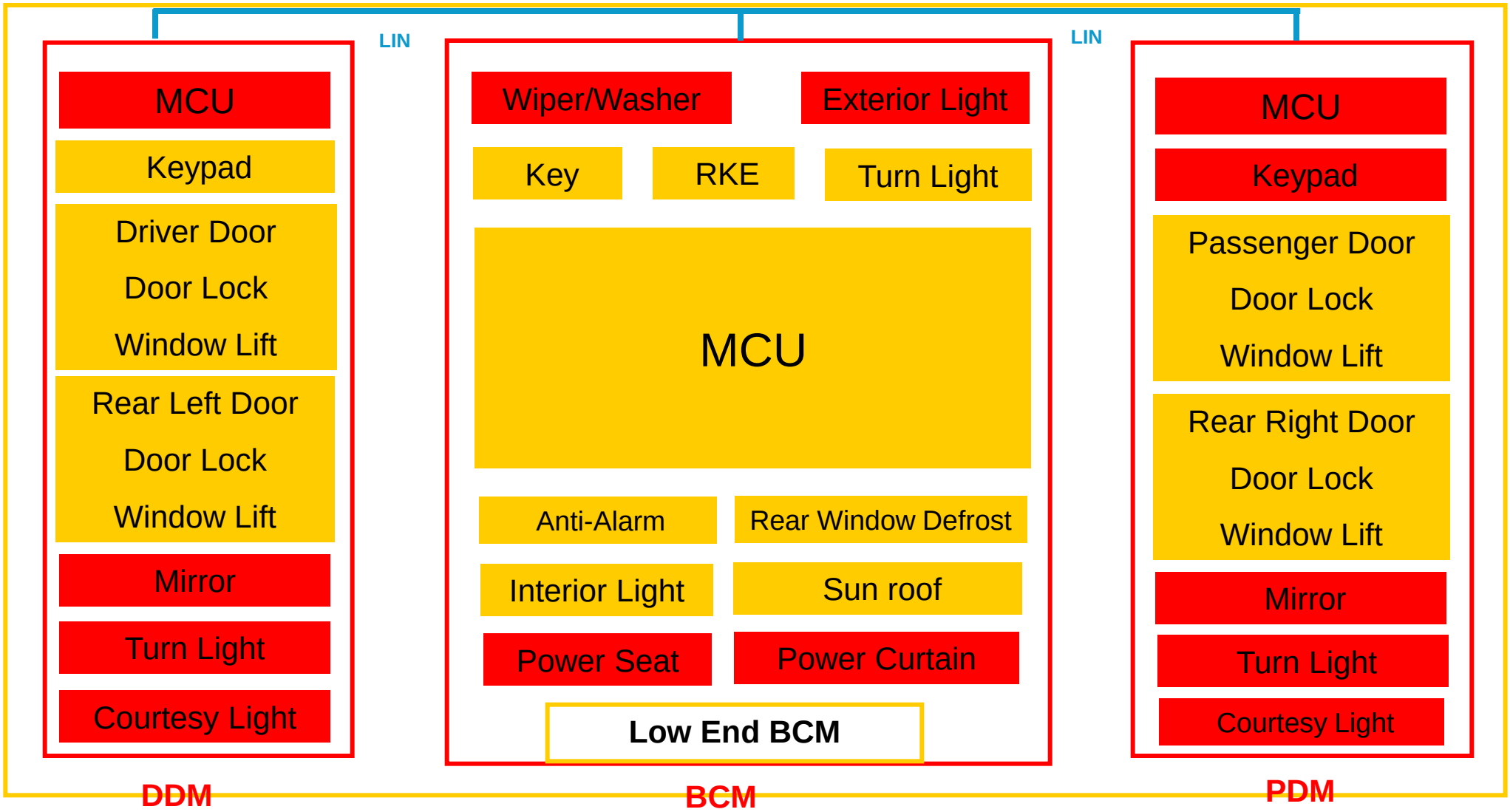

Slide 1

资料整理
火龙果软件
荐

Mid-range System architecture

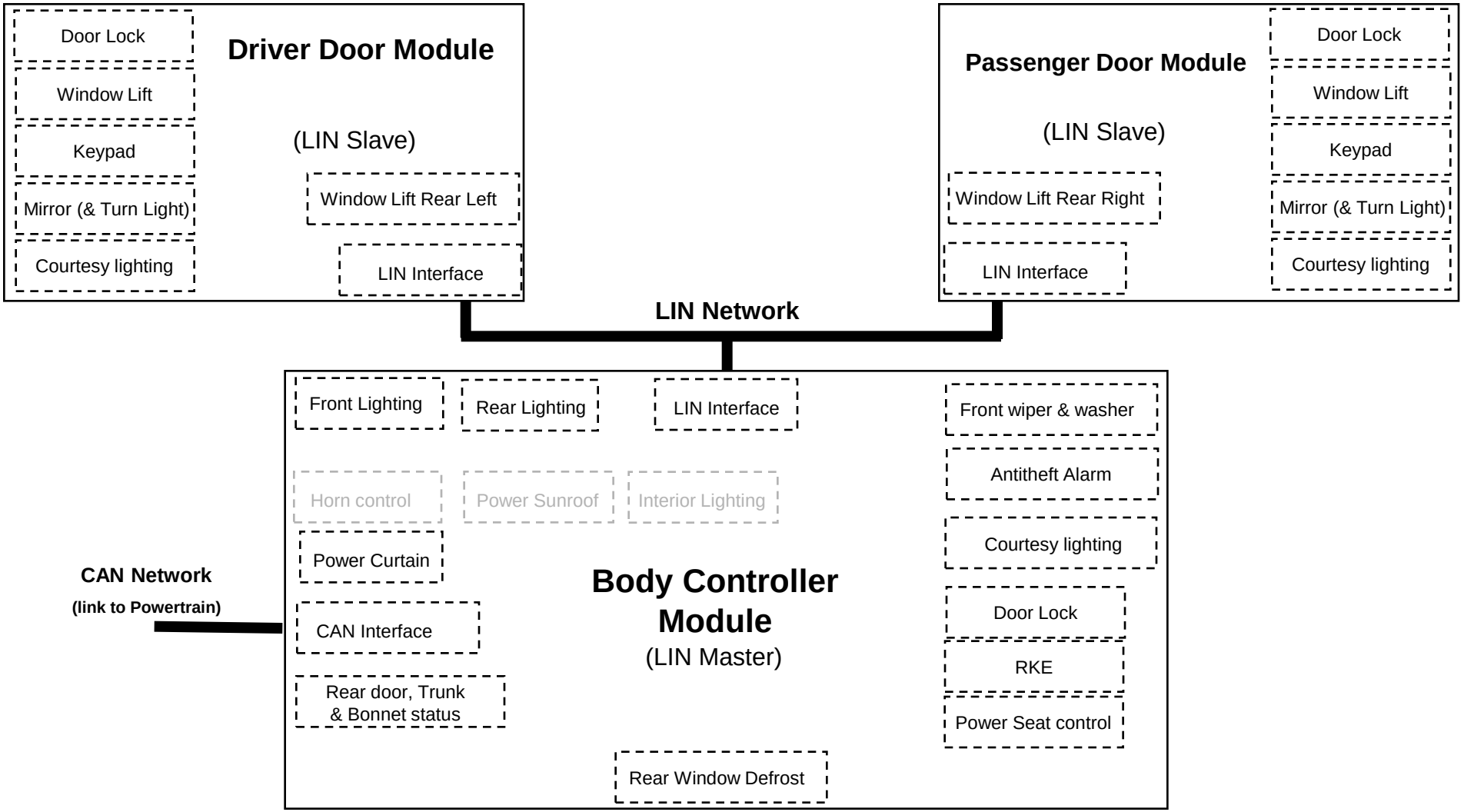

Slide 2

资料整理
火龙果软件
荐

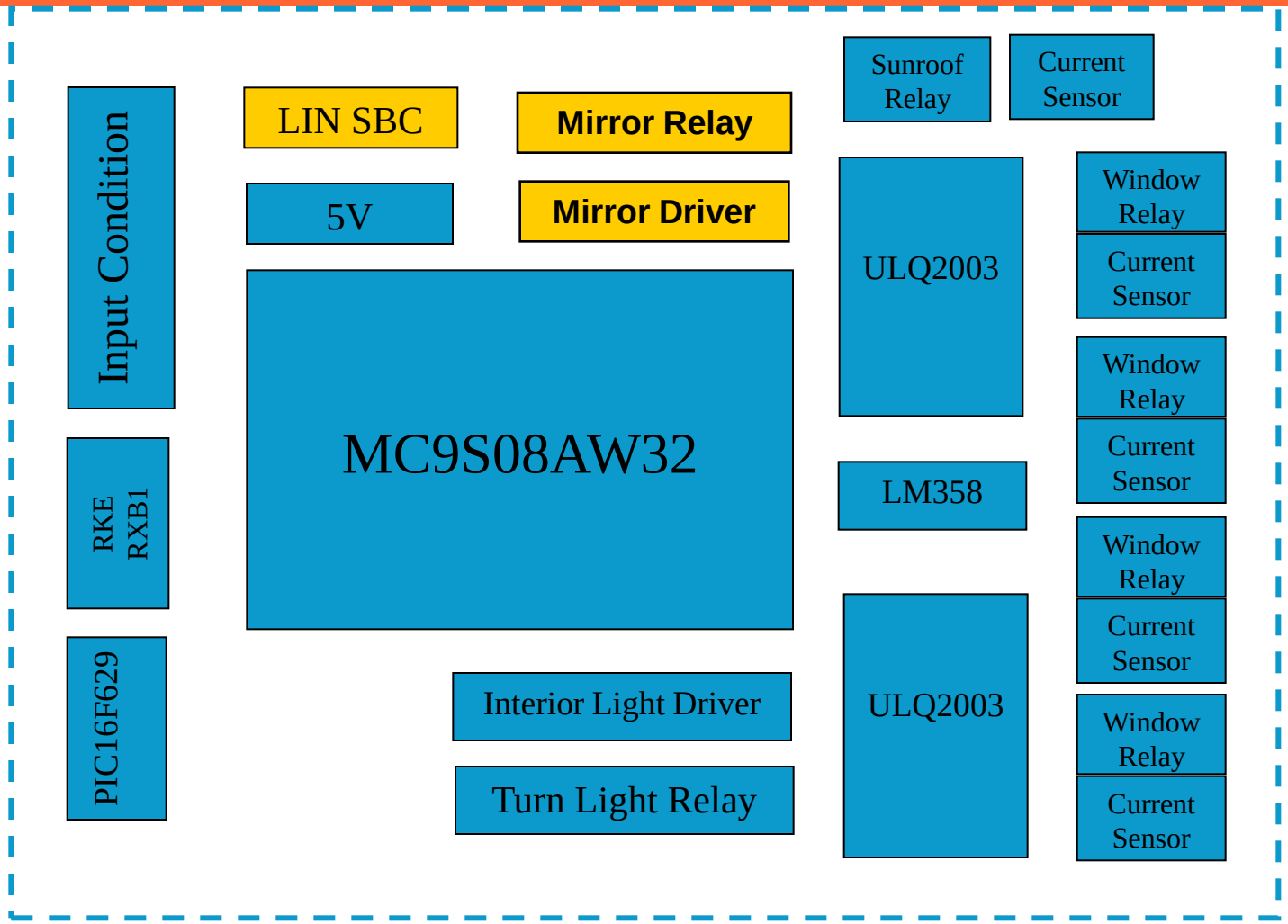

Blue: LE

Yellow: MR

Slide 3

资料整理
火龙果软件
荐

Driver Door (& rear door) Block Diagram

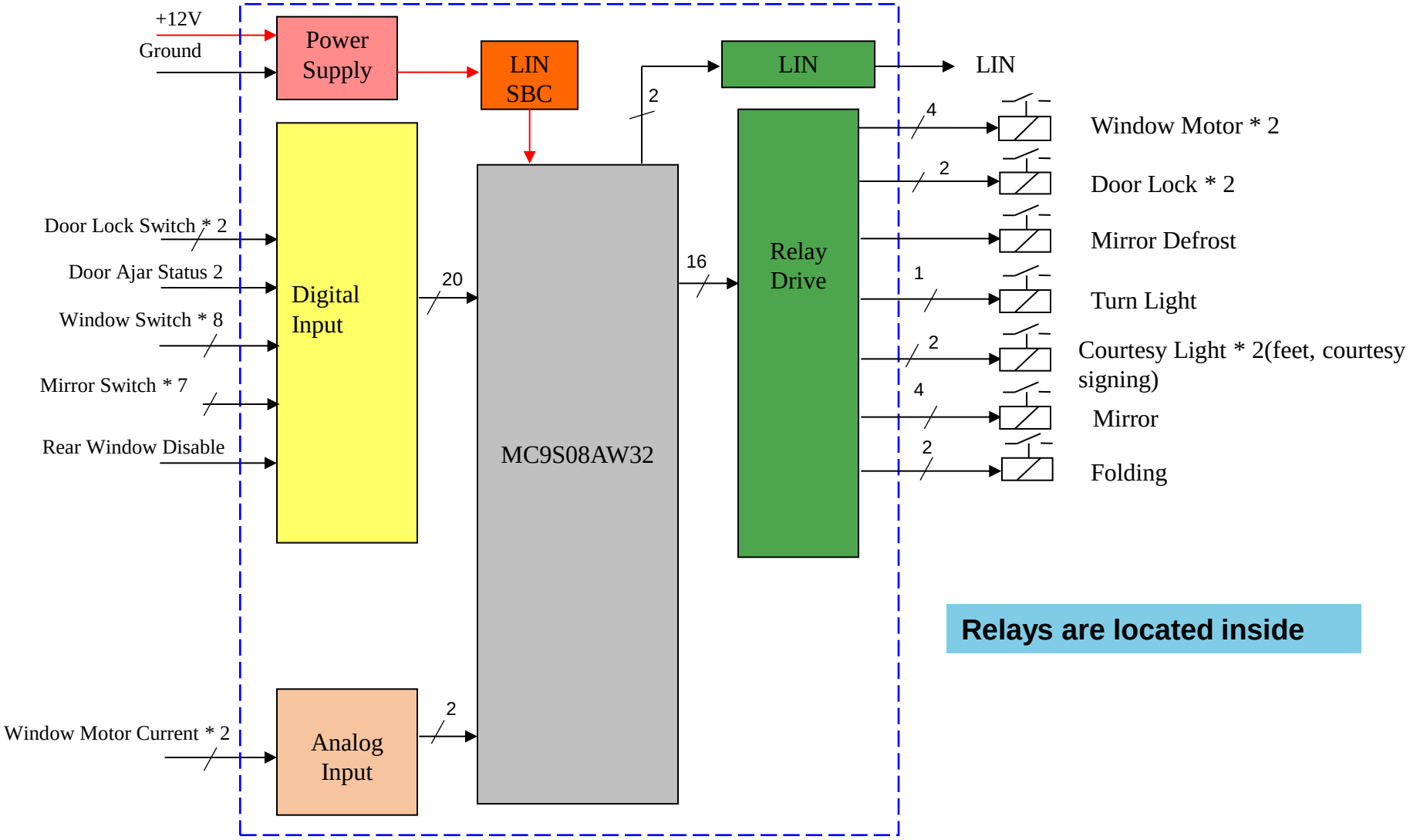

Relays are located inside

Slide 4

资料整理
火龙果软件
荐

PDM

Input Condition

RKE RXB1

PIC16F629

LIN SBC

5V

MC9S08AW32

Mirror Relay

Mirror Driver

Interior Light Driver

Turn Light Relay

Sunroof Relay

Current Sensor

ULQ2003

LM358

ULQ2003

Window Relay

Current Sensor

Window Relay

Current Sensor

Window Relay

Current Sensor

Window Relay

Current Sensor

Blue: LE

Yellow: MR

Slide 5

资料整理 火龙果软件 荐

Passenger Door (& rear door) Block Diagram

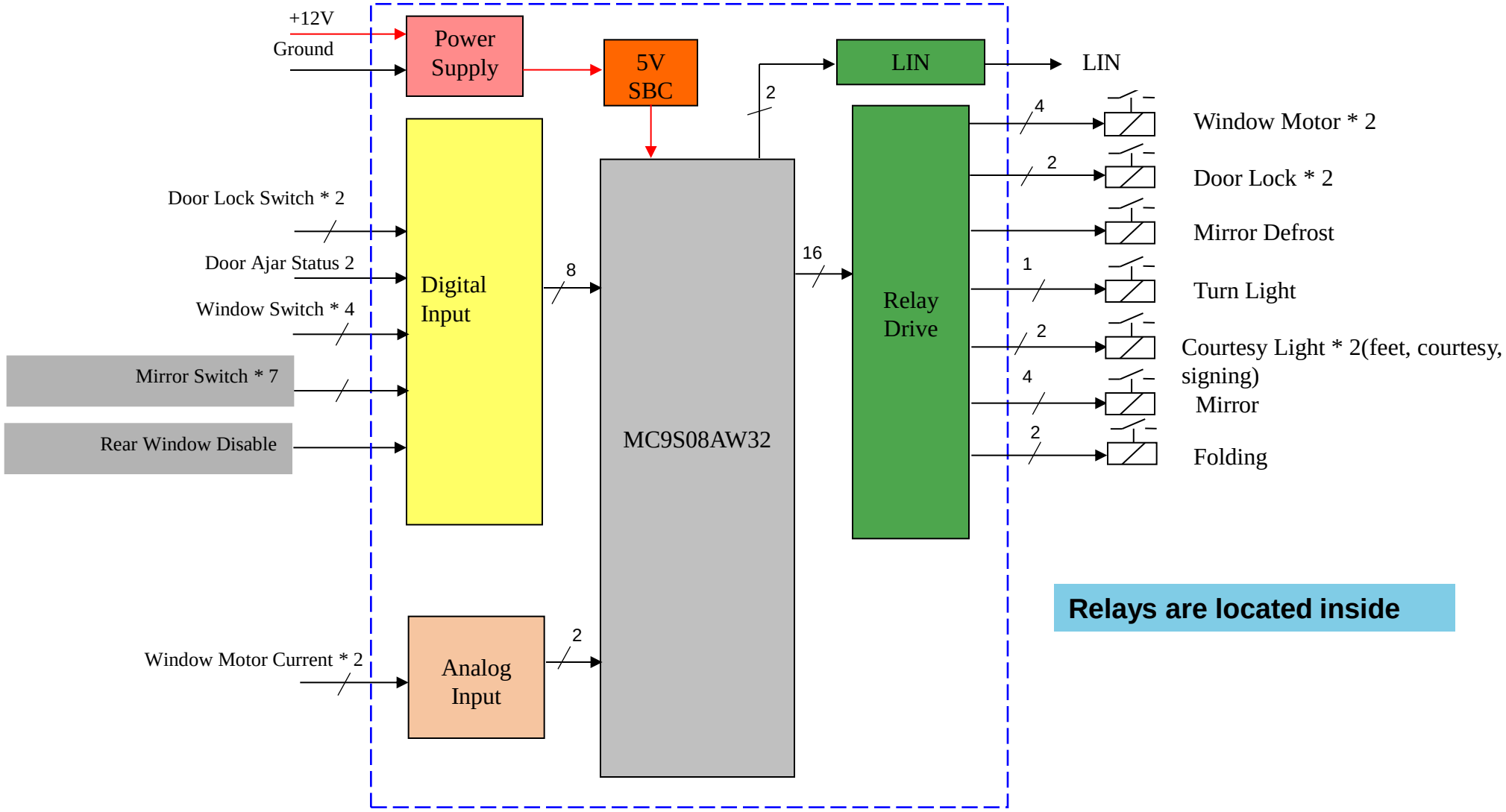

Slide 6

资料整理
火龙果软件
荐

BCM

Input Condition

RKE RXB1

PIC16F629

LIN SBC

Wiper Relay

5V

CAN

Horn Relay

MC9S12C32

ULQ2003

Interior Light Relay

Power Curtain Relay

Exterior Light Relay

Sunroof Relay

Current Sensor

ULQ2003

Seat Relay

Current Sensor

Seat Relay

Current Sensor

LM358

Seat Relay

Current Sensor

ULQ2003

Seat Relay

Current Sensor

Defrost Relay

Blue: LE

Yellow: MR

Slide 7

资料整理 火龙果软件 荐

Central Body Controller Block Diagram – Relay Solution

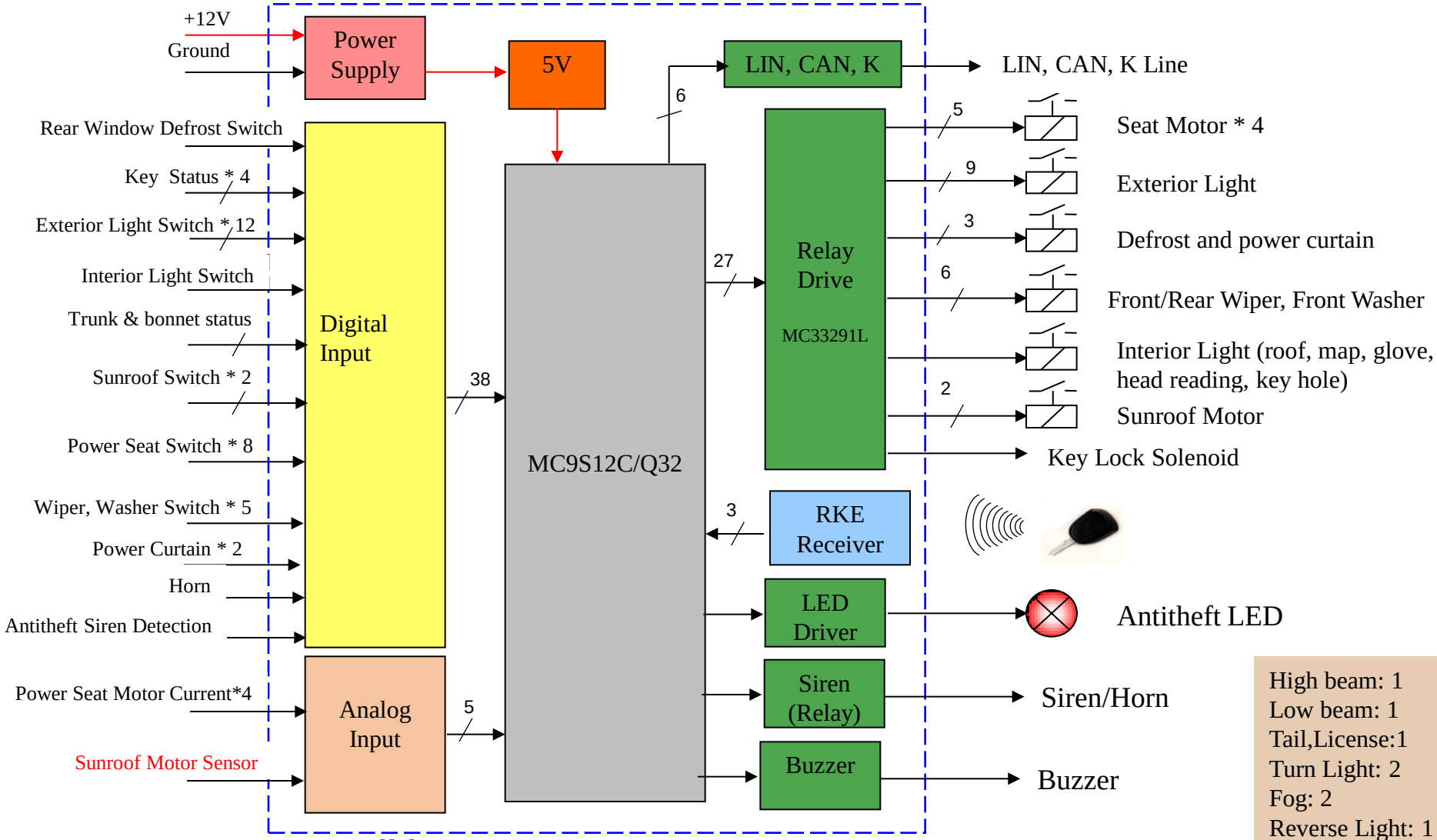

High beam: 1
Low beam: 1
Tail,License:1
Turn Light: 2
Fog: 2
Reverse Light: 1
Brake Light: 1

Slide 8

资料整理 火龙果软件 荐

Mid-Range Platform with analog IC

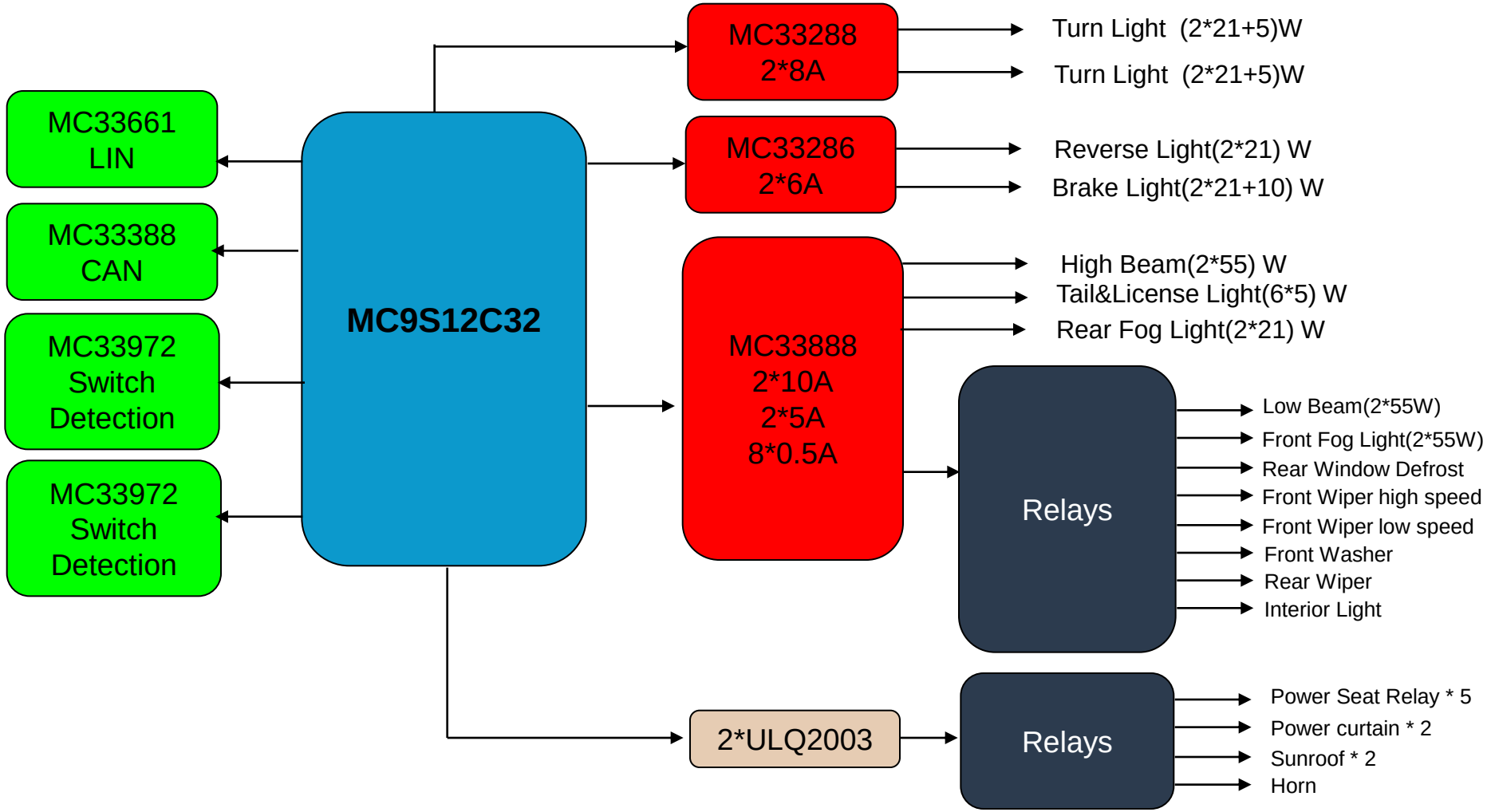

资料整理
火龙果软件
荐

Mid Range Platform Architecture with IDC

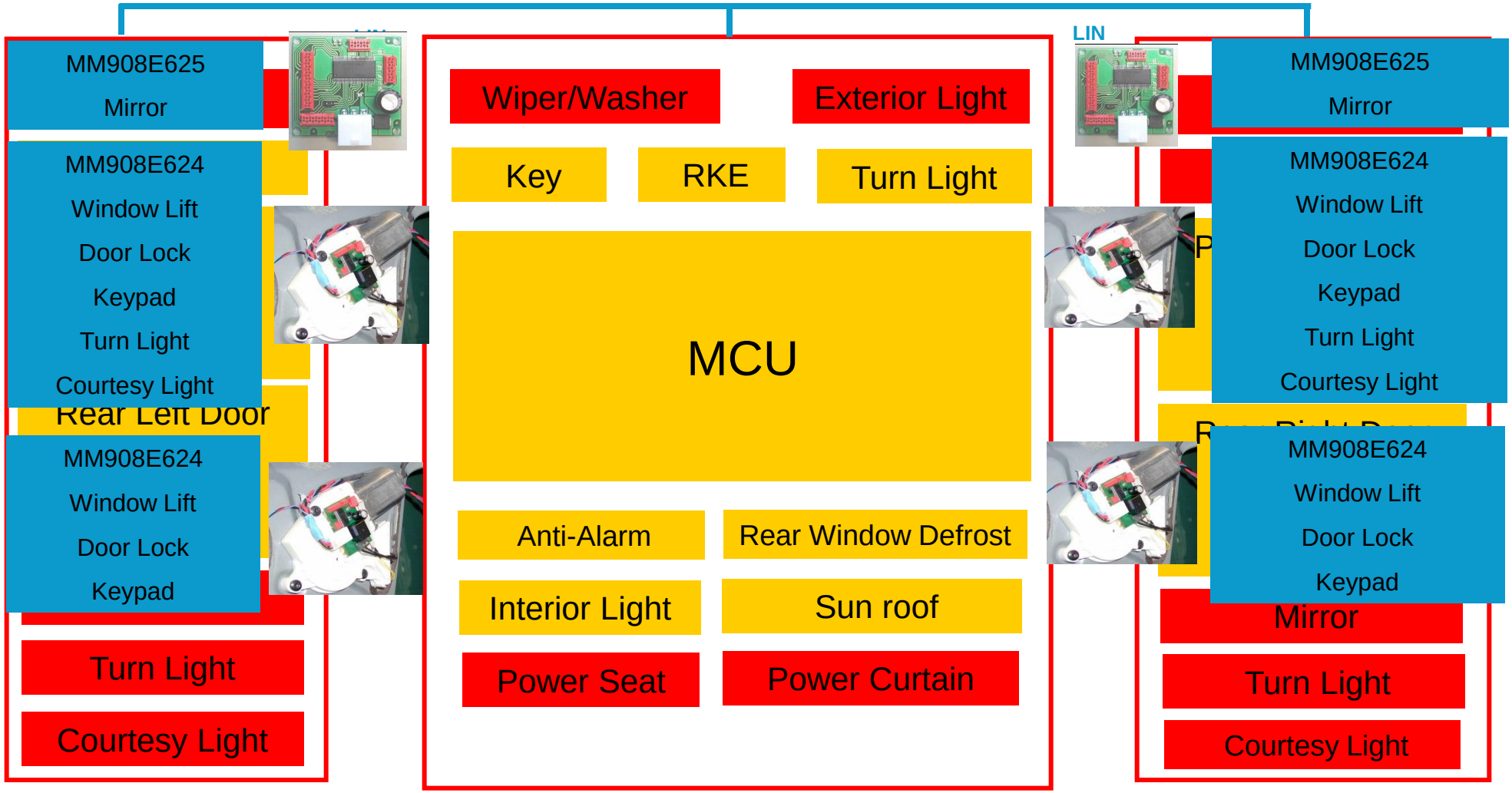

资料整理
火龙果软件
荐

Mirror- Distributed (IDC) Implementation

Intelligent distributed control MM908E621 or MM908E625

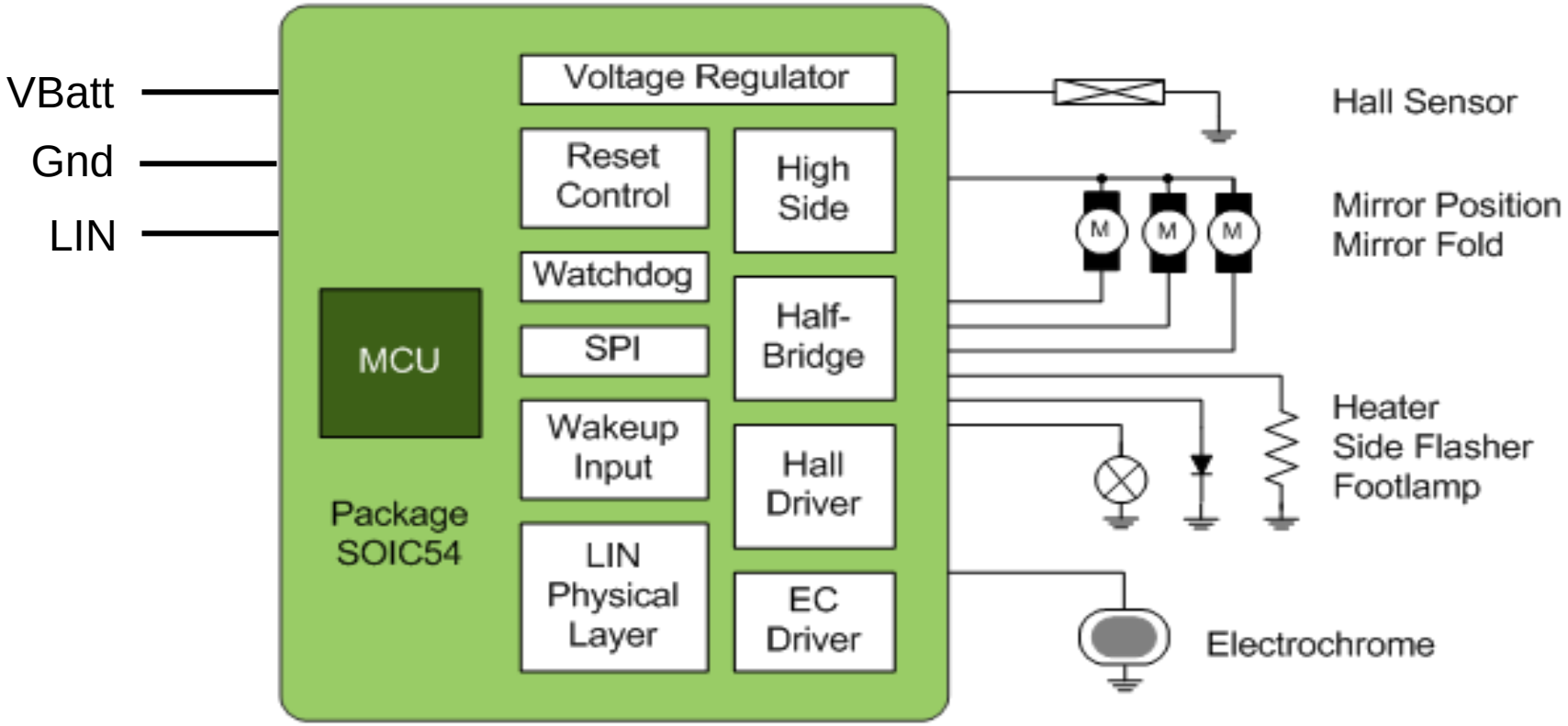

资料整理
火龙果软件
荐

Mirror- Distributed (IDC) Implementation

Advantages

- Lower number of I/C
  - Improved reliability (lower no of solder joints)
- Reduced wiring harness
- Reduced size
  - Module
  - PCB
- Diagnostics
- Scalable architecture (MM908E625 v MM908E621 Med – Hi end solution)
- Mirror commands made through LIN

Disadvantages

- Still require some added power hardware (heater)
- Implement power management scheme
- Need to program and debug node software
- Added functionality which may not be required for low end system
- Added complexity for module H/W, packaging and validation

资料整理
火龙果软件
荐

Mirror- Centralised Implementation

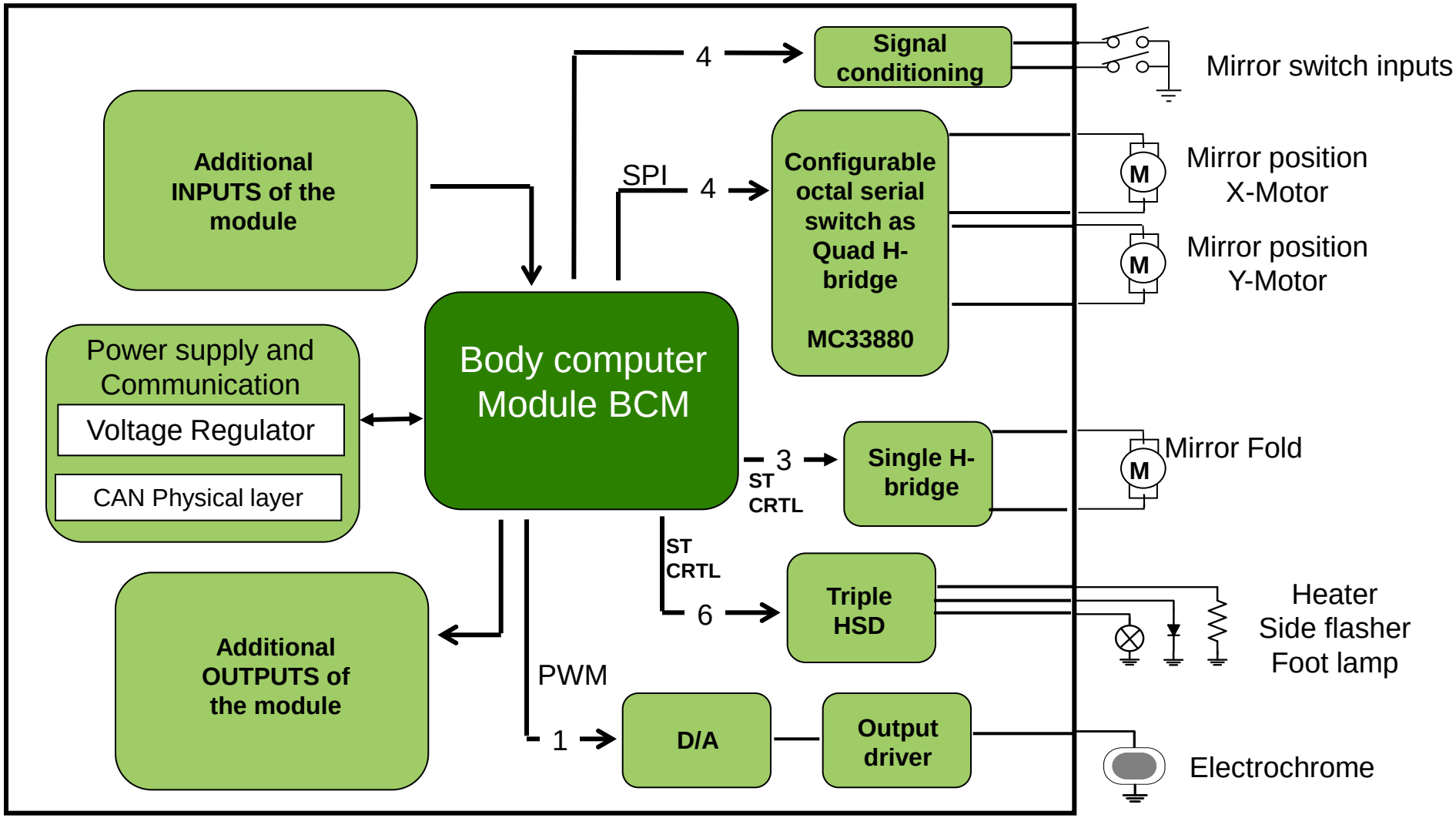

Slide 13

资料整理 火龙果软件 荐

Mirror- Centralised Implementation Pro / Con

Advantages

- Focused implementation for required function
- MCU selection optimised for application
- Minimal control latency

Disadvantages

- Difficulty in measuring mirror position
- Diagnostics requires added sophistication of H/W drivers
- Increased number of wires in harness
  - Harness routing
  - Harness cost
- Direct switch input required to control the mirror position

资料整理
火龙果软件
荐

Design challenge – PCB size

High-end EC Mirror Diagram

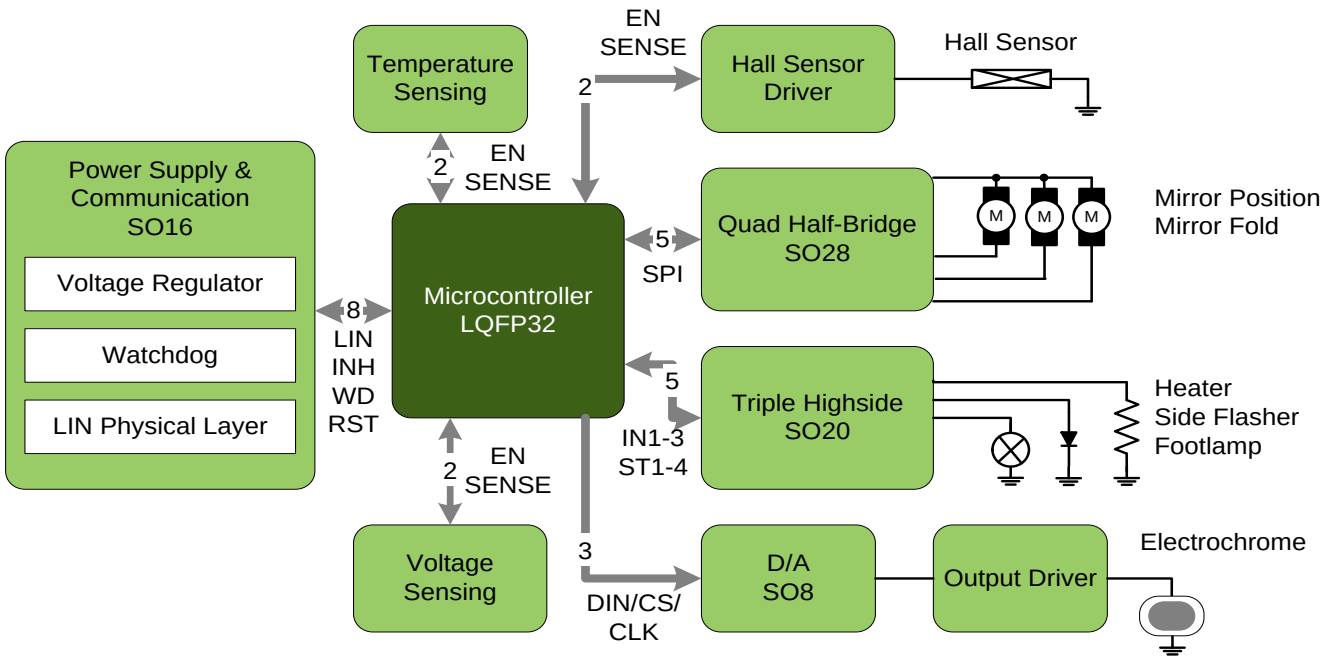

Number of Power IC: 5-7
Number of Digital Signal: 24

Module PCB Layout

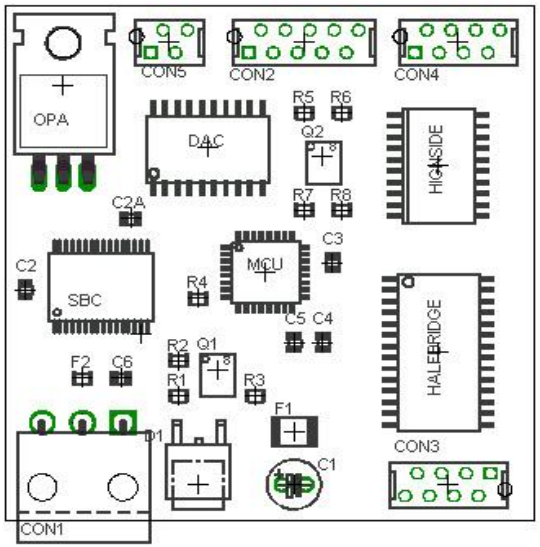

Minimum PCB size: 60mmx60mm

Source: Power IC devices are sampled from 2 major vendors in the industry (excluding Freescale)

资料整理
火龙果软件
荐

Design challenge – PCB size

High-end EC Mirror Diagram

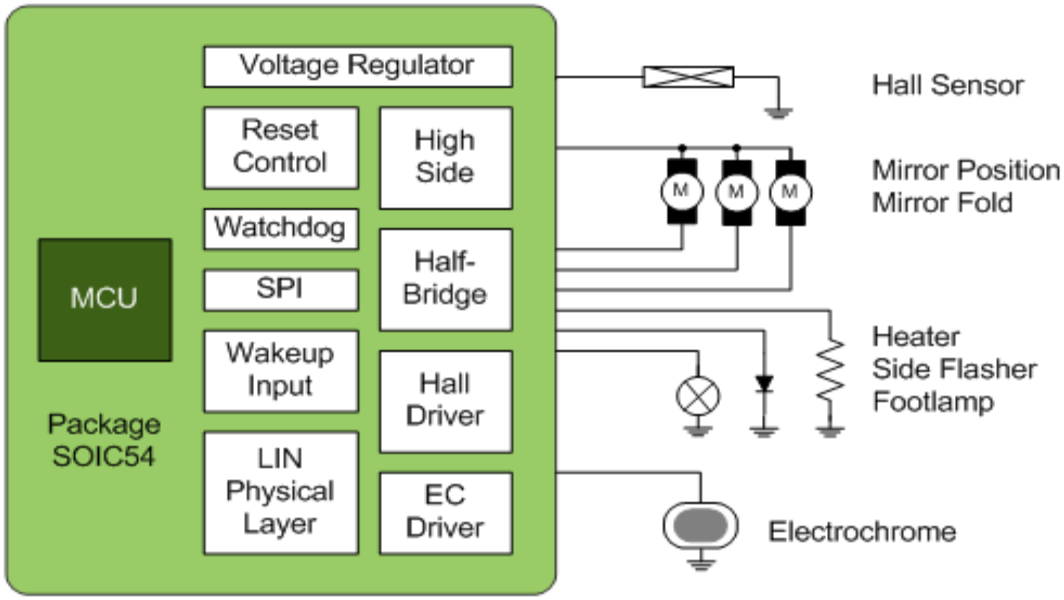

Number of Power IC: 1
Number of Digital Signal: 2 (INT/RST)

Module PCB Layout

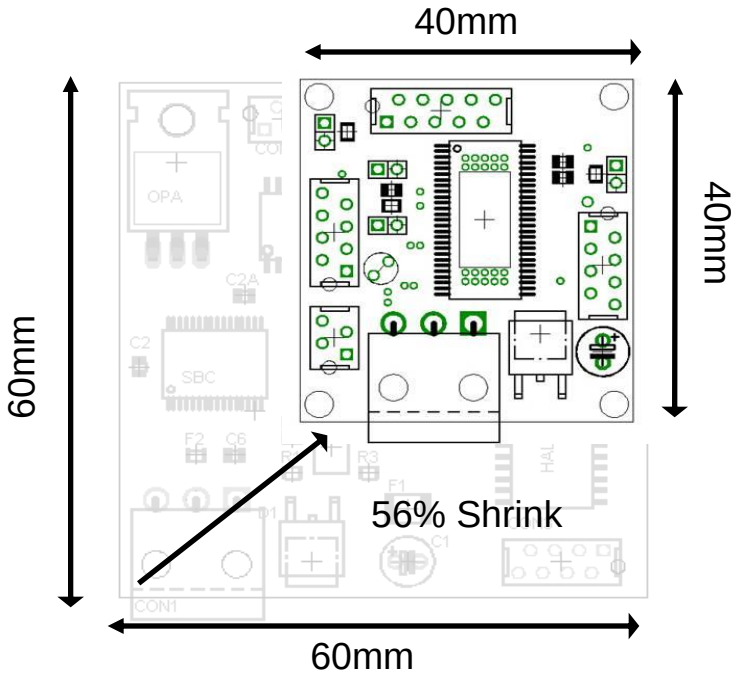

PCB size: 40mmx40mm, 56% shrink in size

资料整理
火龙果软件
荐

Mirror implementations Comparison

	Distributed (IDC)	Distributed (MCU+SMOS)	Centralized
Component cost	Medium	Hi	Medium
Functionality	Hi	Hi	Hi
Scalability Flexibility	Medium	Medium	Medium
Ease of implementation	Hi	Medium	Medium
Reliability	Hi	Medium	Lo
Ease of manufacture	Hi	Medium	Lo

资料整理
火龙果软件
荐

Window Lift- Distributed Implementation

IDC - MM908E624

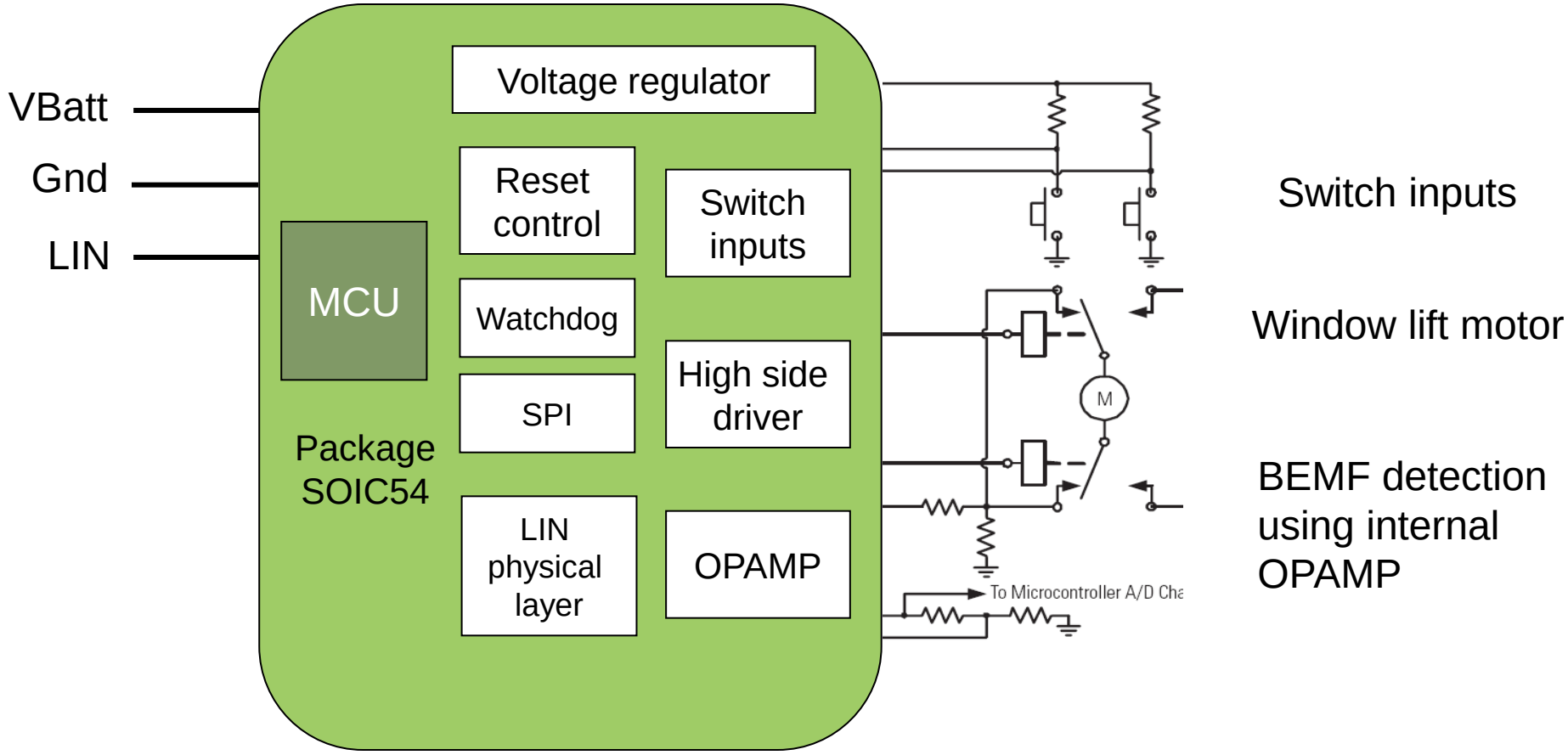

资料整理 火龙果软件 荐

Window Lift- Distributed Pro / Con

Advantages

- Lower number of I/C
  - Improved reliability (lower no of solder joints)
- Reduced wiring harness
- Reduced size
  - Module
  - PCB
- Diagnostic
- Scalable architecture

Disadvantages

- Still require relays to drive load
- Need to program and debug node software
- Added functionality which may not be required for low end system
- Added complexity for module H/W, packaging and validation

资料整理
火龙果软件
荐

Window Lift- Centralised control Implementation

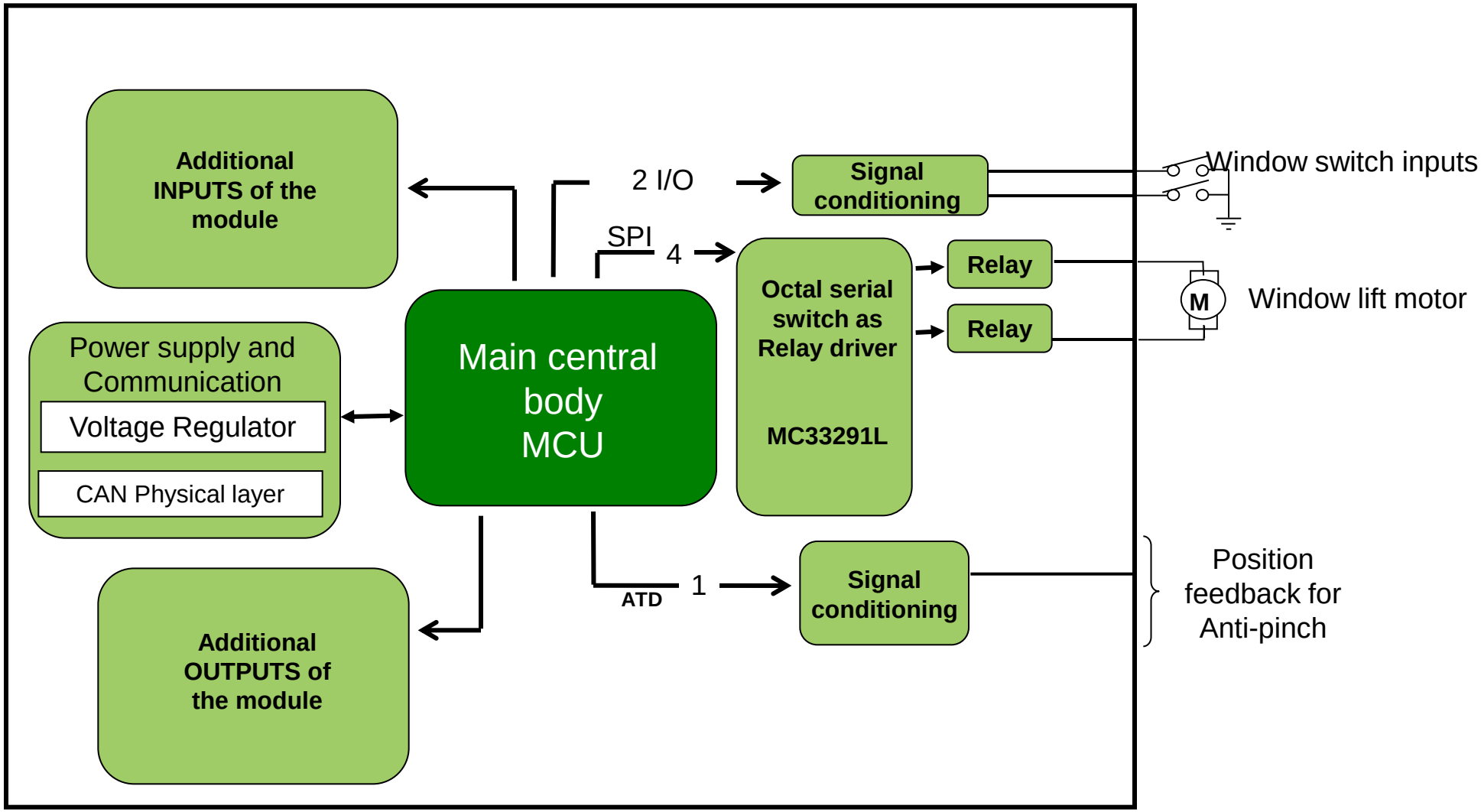

资料整理 火龙果软件 荐

Window Lift- Centralised control Pro / Con

Advantages

- Focused implementation for required function
- Low component cost
- MCU selection optimised for application
- Minimal control latency

Disadvantages

- Difficulty in measuring anti-pinch from Central body controller
- Poor scalability
- No diagnostics
- Increased number of wires in harness
  - Harness routing
  - Harness cost
- Additional H/W required for speed control possible
- Increased MCU functionality for stall detection
- Control of multiple windows at same time

资料整理
火龙果软件
荐

Window Lift Comparison

	Distributed	**Centralized**
Component cost	Medium	Lo
Functionality	Hi	Medium
Scalability Flexibility	Hi	Lo
Ease of implementation	Medium	Medium
Reliability	Hi	Lo
Ease of manufacture	Hi	Lo

资料整理
火龙果软件
荐

Door lock + Window lift – Distributed Implementation

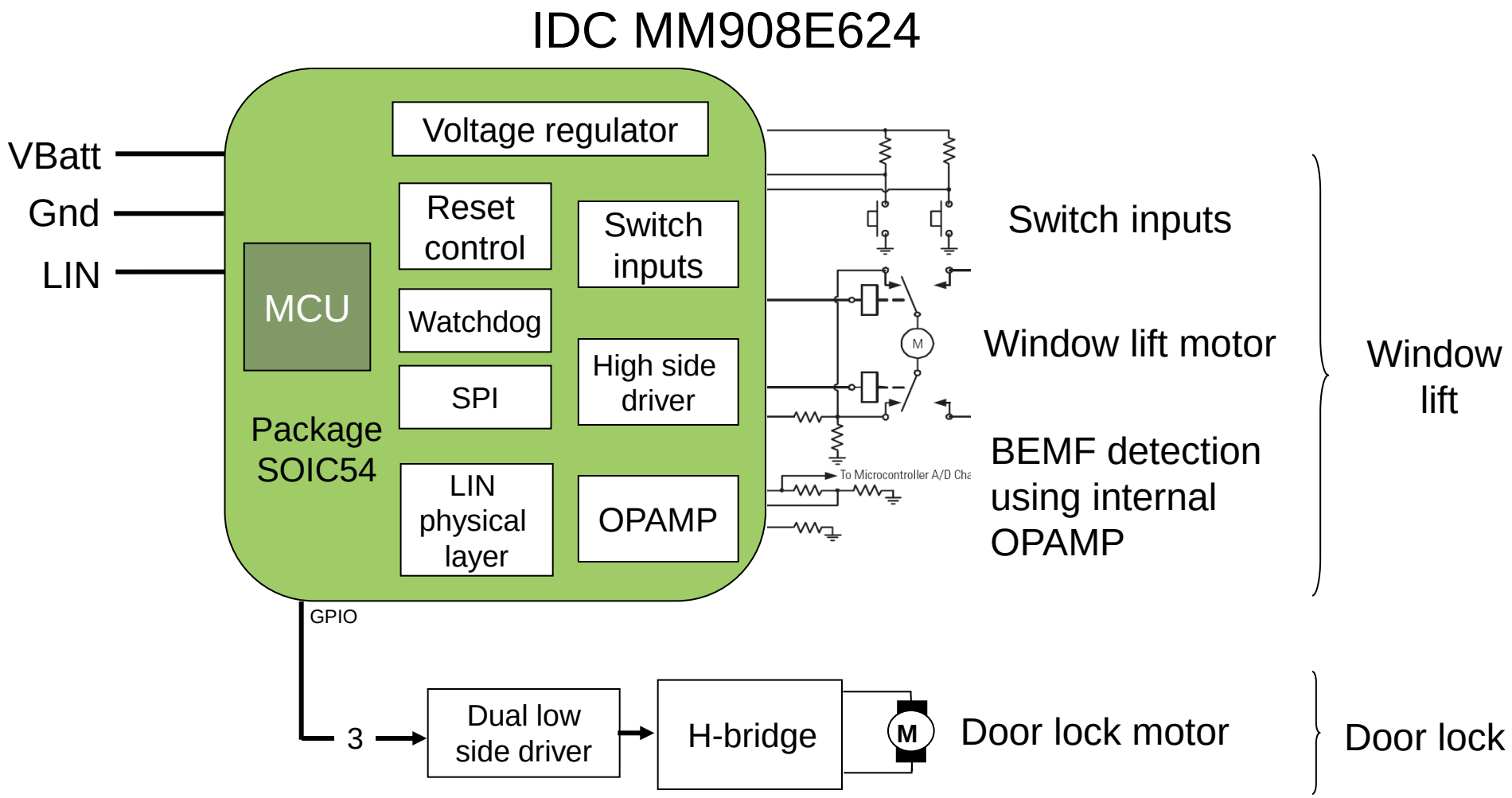

资料整理 火龙果软件 荐

Door lock + window lift – Distributed Pro / Con

Advantages

- Reuse existing Window H/W already in door
- Reduced wiring harness
- Reduced size
  - Module
  - PCB
- Scalable architecture

Disadvantages

- Still require relays to drive load
- Need additional relay drivers added
- Need to program and debug node software
- Added functionality which may not be required for low end system
- Added complexity for module H/W, packaging and validation
- Communications over LIN may impact latency for Passive Entry

资料整理
火龙果软件
荐

Door lock + window lift – Centralised Implementation

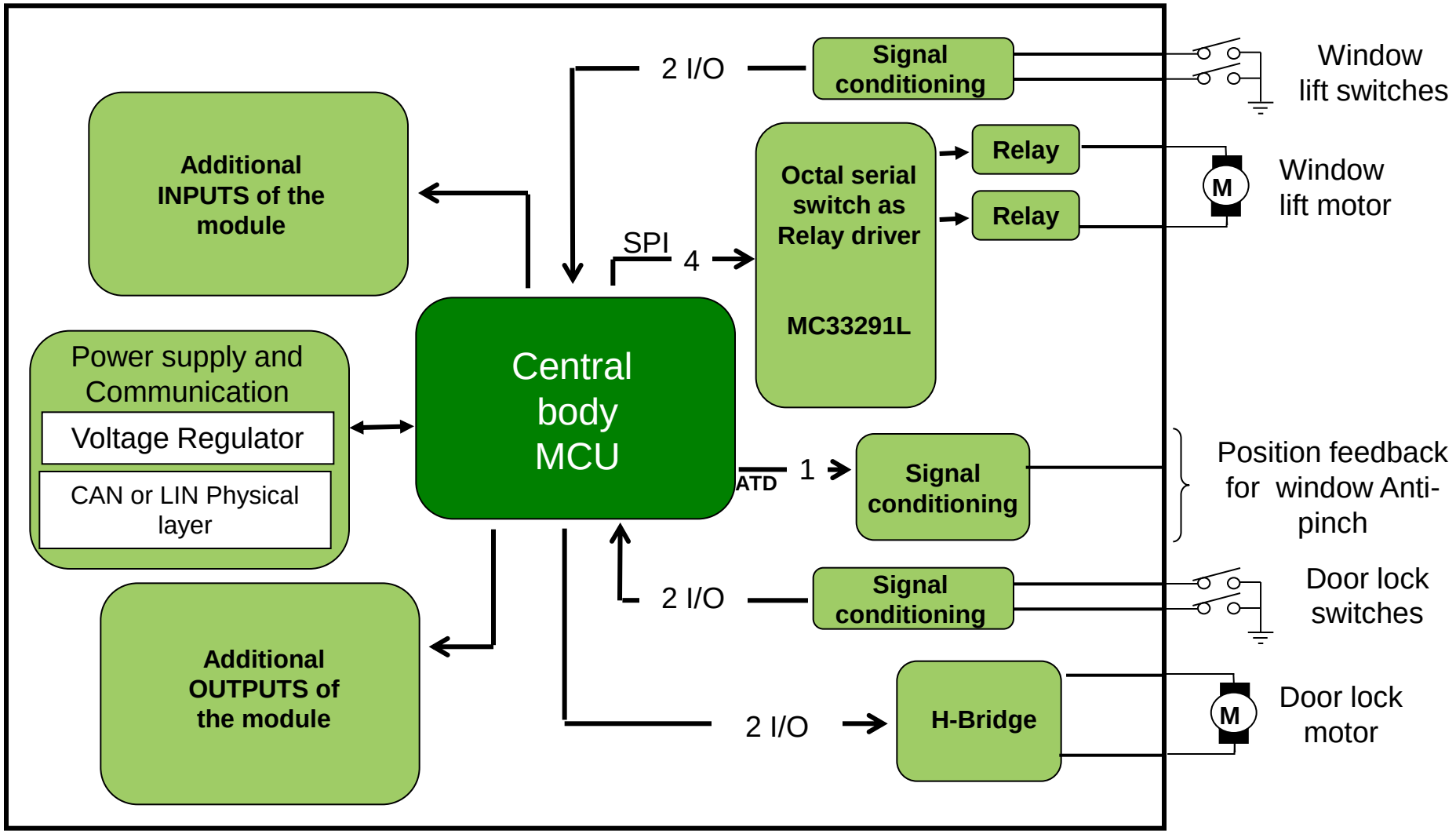

资料整理 火龙果软件 荐

Door lock + window lift – Centralised Pro / Con

Advantages

- Octal serial driver (MC33291) used for all door relay pre-drive
- Focused implementation for required function
- Minimal control latency

Disadvantages

- Need to add discrete relay pre-driver for Boot lock
- Less scalability
- No diagnostics
- Increased number of wires in harness
  - Harness routing
  - Harness cost

资料整理
火龙果软件
荐

Door Lock + Window Lift Sleep Current Consumption

Distributed

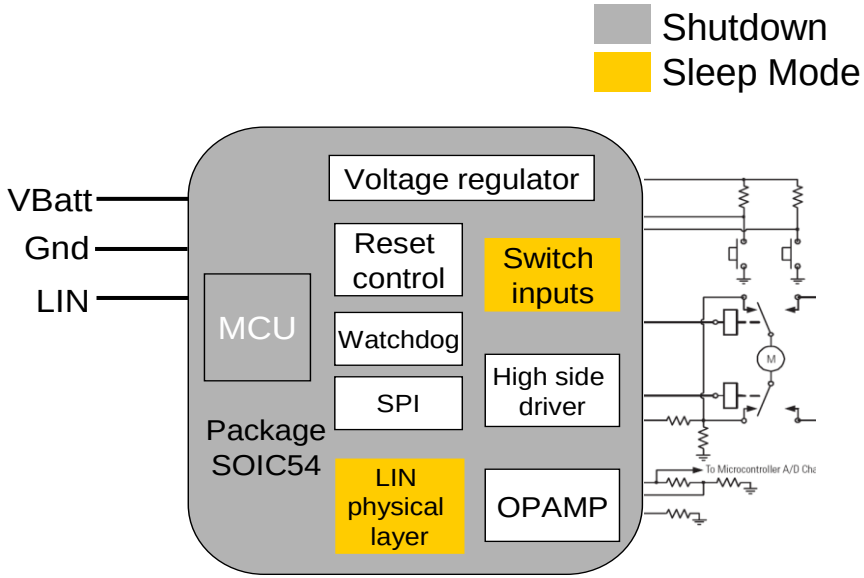

IDC Sleep Mode Operation Condition
- System in sleep (LIN/Input wakeup) mode
- Microcontroller shutdown

Total Sleep Current: 20uA
Current Consumption Reduction: 94%

Centralized

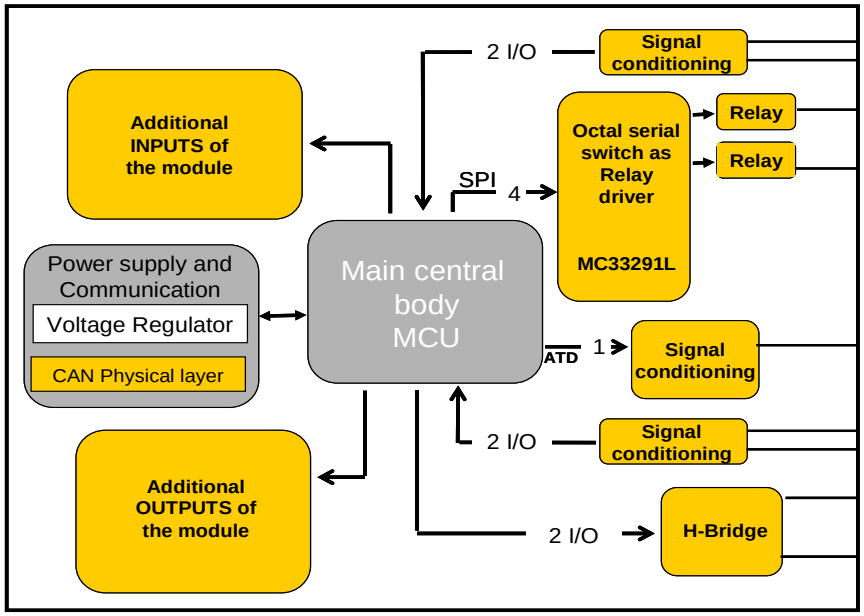

Power IC Sleep Mode Operation Condition
- Power supply chip in sleep (LIN wakeup) mode
- Microcontroller shutdown
- Power ICs in sleep mode
- Assume no additional current assumption from discrete components

Total Sleep Current: 331uA

资料整理 火龙果软件 荐

Door lock Comparison

	Distributed	Centralized
Component cost	Lo	Medium
Functionality	Hi	Medium
Scalability Flexibility	Hi	Lo
Ease of implementation	Medium	Medium
Reliability	Hi	Medium
Ease of manufacture	Hi	Lo

资料整理
火龙果软件
荐

Summary

- Relay
  - Mid-Range DDM, PDM can use most of hardware and software of Low end platform
  - Low cost
  - No diagnosis function
- IDC
  - Modular design
  - Can be easier to upgrade to High end platform
  - Flexible
  - Low power consumption
  - Low cost
- Analog
  - Centralized control with smaller space and more functions
  - High reliability
  - Expensive

资料整理
火龙果软件
荐

High End Platform Architecture

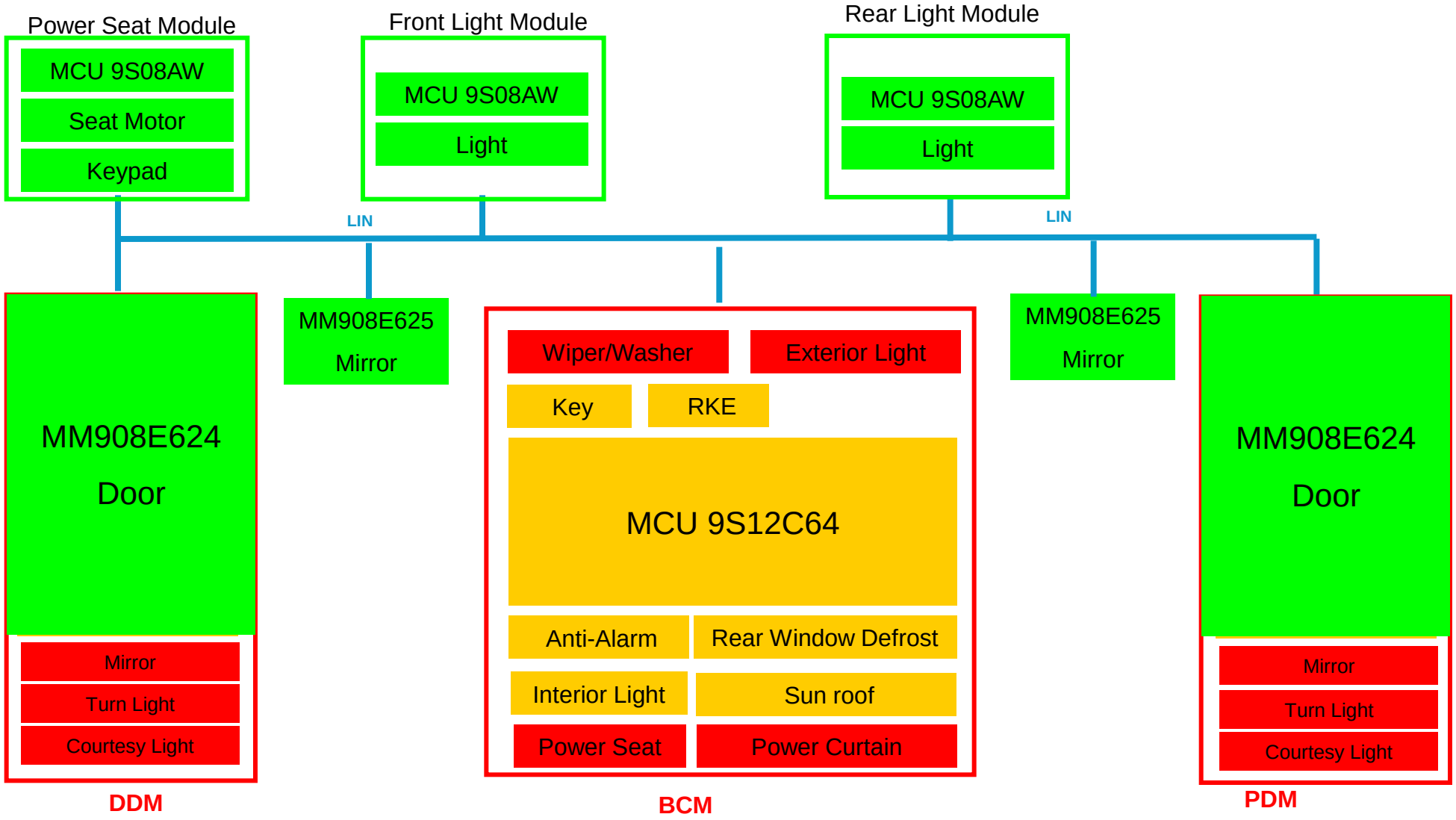

资料整理
火龙果软件
荐

High End Platform Light Control with analog IC

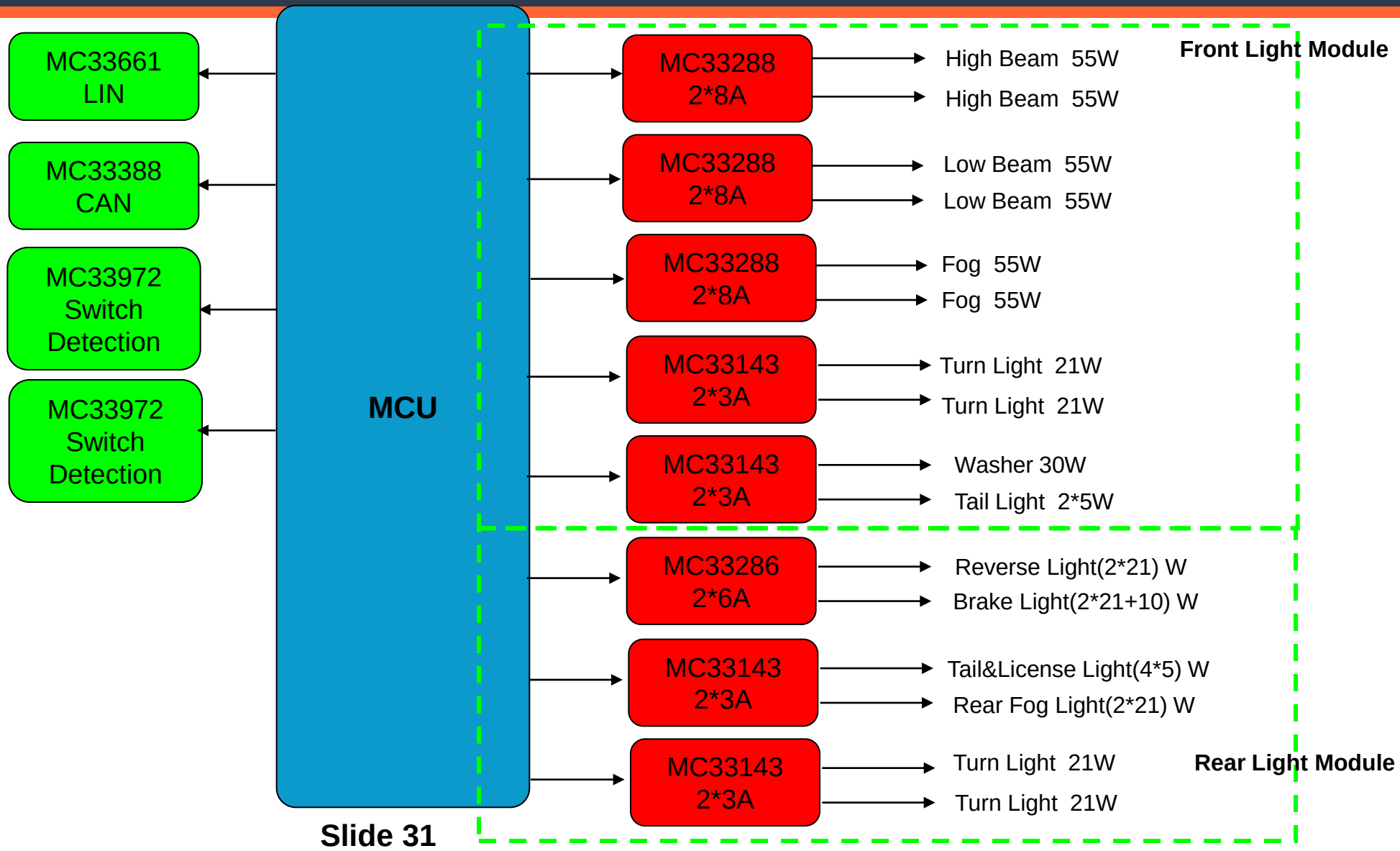

资料整理
火龙果软件
荐

Summary

- High End platform has the same architecture as Mid-Range.
- The light control is a separate module
- The light module can use analog to implement protection, diagnostic and PWM control
- The power seat is controlled by seat module
- If using relay, most hardware and software can use low end
- If using IDC, the system will be flexible, easy to manufacture and save space.

资料整理
火龙果软件
荐